2023 W800

PARTS DIAGRAM

Stand(s)

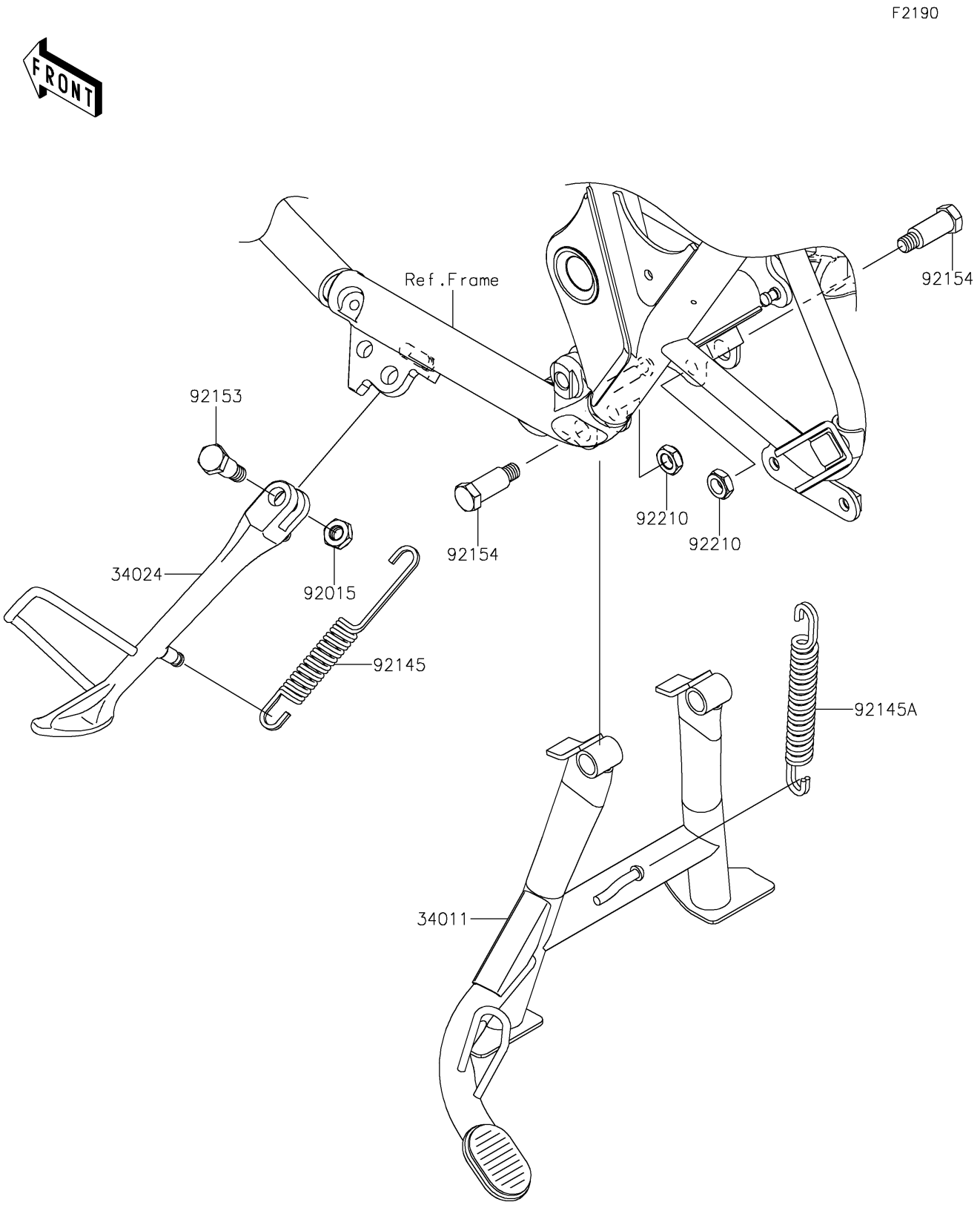

© 2026 Kawasaki Motors Corp., U.S.A.

2023 W800

PARTS LIST

Stand(s)

ITEM NAME	PART NUMBER	QUANTITY
STAND-CENTER (Ref # 34011)	34011-0041	1
STAND-SIDE (Ref # 34024)	34024-0154	1
NUT,LOCK,10MM,BLACK (Ref # 92015)	92015-1188	1
SPRING,SIDE STAND (Ref # 92145)	92145-0687	1
SPRING,CENTER-STAND (Ref # 92145A)	92145-1938	1
BOLT,SIDE STAND,10MM (Ref # 92153)	92153-1416	1
BOLT,10X39.5 (Ref # 92154)	92154-0439	2
NUT,LOCK,10MM (Ref # 92210)	92210-0278	2

© 2026 Kawasaki Motors Corp., U.S.A.