2023 W800

PARTS DIAGRAM

Crankcase

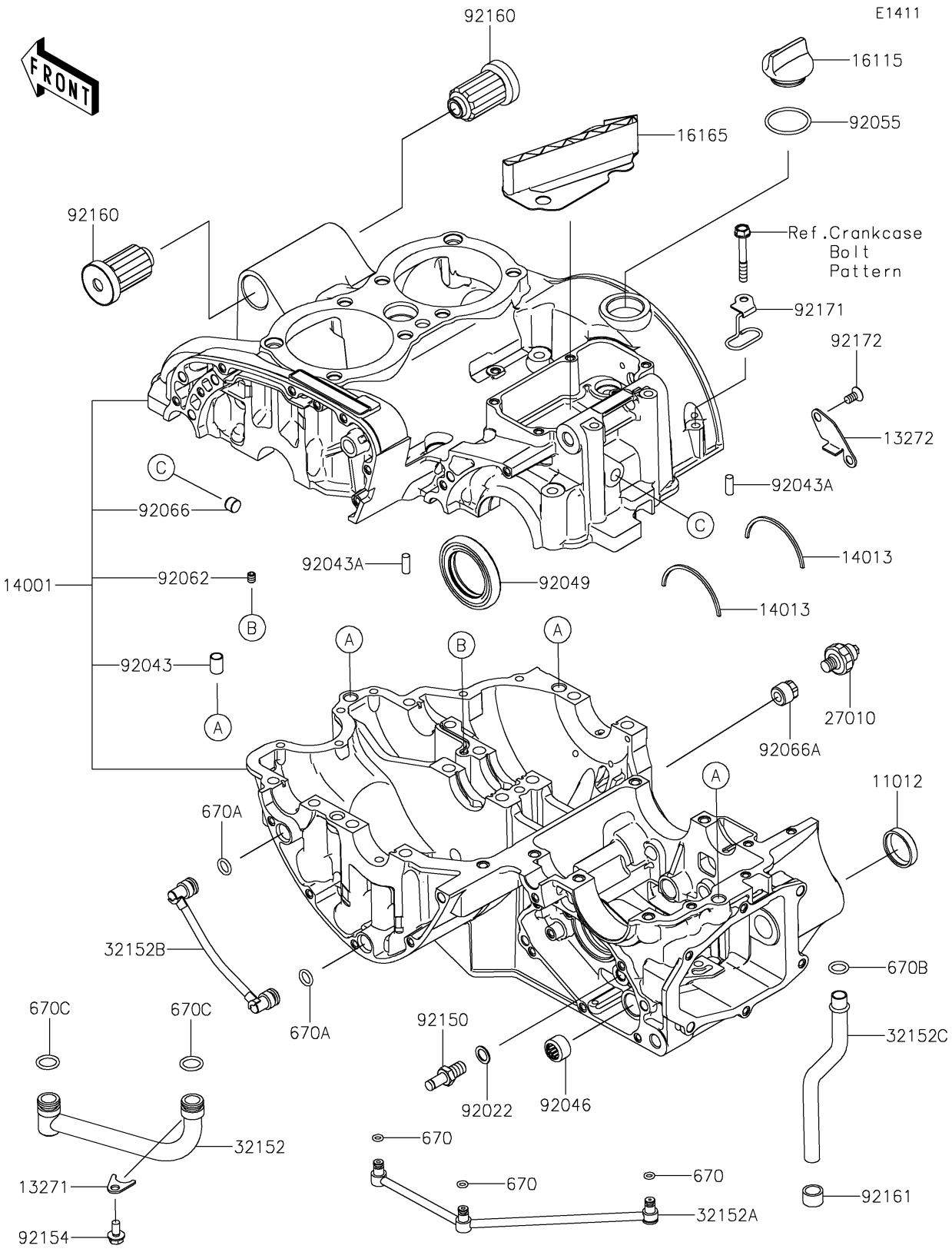

© 2026 Kawasaki Motors Corp., U.S.A.

2023 W800

PARTS LIST

Crankcase

ITEM NAME	PART NUMBER	QUANTITY
CAP (Ref # 11012)	11012-1567	1
PLATE,OIL PIPE (Ref # 13271)	13271-1187	1
PLATE,BREATHER (Ref # 13272)	13272-0982	1
SET-CRANKCASE (Ref # 14001)	14001-0586	1
RING-POSITION,T=1.98 (Ref # 14013)	14013-1004	2
CAP-OIL FILLER (Ref # 16115)	16115-1009	1
SEPARATOR,BREATHER (Ref # 16165)	16165-1068	1
SWITCH,OIL PRESSURE (Ref # 27010)	27010-1313	1
PIPE,MAIN OIL (Ref # 32152)	32152-1902	1
PIPE,TRANSMISSION OIL (Ref # 32152A)	32152-1903	1
PIPE,BALANCER OIL (Ref # 32152B)	32152-1904	1
PIPE,BREATHER OIL (Ref # 32152C)	32152-1905	1
WASHER,10X15X1.0 (Ref # 92022)	92022-1973	1
PIN,DOWEL,10X14 (Ref # 92043)	92043-1037	3
PIN,6X16 (Ref # 92043A)	92043-1690	2
BEARING-NEEDLE,HK1312 (Ref # 92046)	92046-1148	1
SEAL-OIL,HTC40628 (Ref # 92049)	92049-1501	1
RING-O,31.5X2.6 (Ref # 92055)	92055-049	1
NOZZLE,6X8,BLACK (Ref # 92062)	92062-1079	1
PLUG,10.5MM (Ref # 92066)	92066-1355	1
PLUG,MAIN GALLERY (Ref # 92066A)	92066-1530	1
BOLT,RETURN SPRING (Ref # 92150)	92150-1803	1
BOLT,FLANGED,6X12 (Ref # 92154)	92154-0485	1
DAMPER,ENGINE MOUNT (Ref # 92160)	92160-1483	2
DAMPER (Ref # 92161)	92161-0971	1
CLAMP,DRAIN TUBE (Ref # 92171)	92171-1124	1
SCREW-CSK-CROS,6X12 (Ref # 92172)	92172-0747	2
O RING (Ref # 670)	670D1505	3
O RING,10MM (Ref # 670A)	670D2010	2

© 2026 Kawasaki Motors Corp., U.S.A.

2023 W800

PARTS LIST

Crankcase

ITEM NAME	PART NUMBER	QUANTITY
O RING,12MM (Ref # 670B)	670D2012	1
O RING,14MM (Ref # 670C)	670D2014	2

© 2026 Kawasaki Motors Corp., U.S.A.