2025 Vulcan 1700 Voyager ABS

PARTS DIAGRAM

Side Covers/Chain Cover

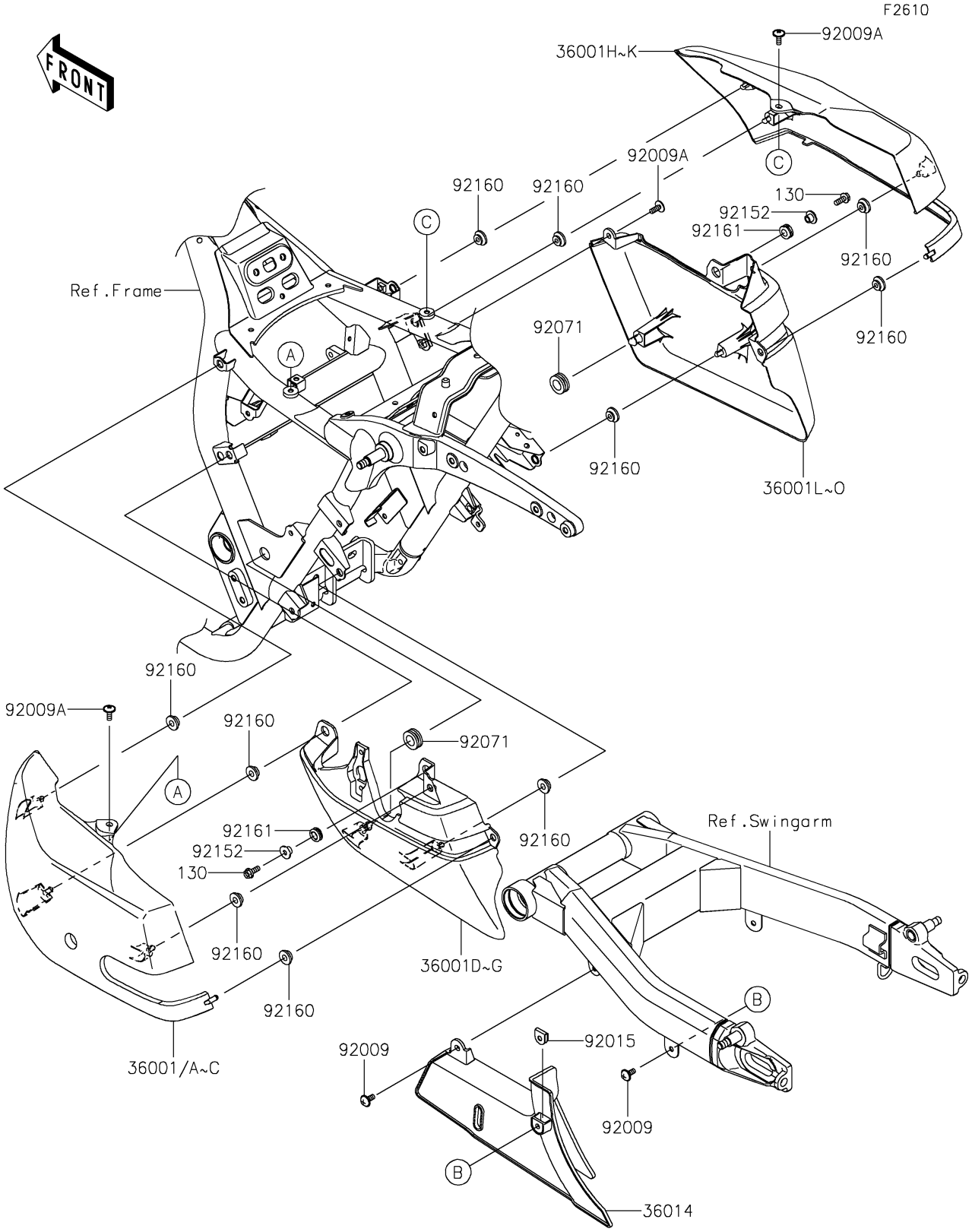

© 2026 Kawasaki Motors Corp., U.S.A.

2025 Vulcan 1700 Voyager ABS

PARTS LIST

Side Covers/Chain Cover

ITEM NAME	PART NUMBER	QUANTITY
COVER-SIDE,LH,UPP,M.C.GRAY (Ref # 36001A)	36001-0139-51A	1
COVER-SIDE,LH,UPP,M.O.BLUE (Ref # 36001C)	36001-0139-726	1
COVER-SIDE,LH,LWR,M.M.GRAY (Ref # 36001D)	36001-0140-25X	1
COVER-SIDE,LH,LWR,M.G.GRAY (Ref # 36001E)	36001-0140-45W	1
COVER-SIDE,RH,UPP,M.C.GRAY (Ref # 36001I)	36001-0141-51A	1
COVER-SIDE,RH,UPP,M.O.BLUE (Ref # 36001K)	36001-0141-726	1
COVER-SIDE,RH,LWR,M.M.GRAY (Ref # 36001L)	36001-0142-25X	1
COVER-SIDE,RH,LWR,M.G.GRAY (Ref # 36001M)	36001-0142-45W	1
CASE-CHAIN (Ref # 36014)	36014-0042	1
SCREW,6X14 (Ref # 92009)	92009-1555	2
SCREW,6X16 (Ref # 92009A)	92009-1621	3
NUT,CLIP,6MM (Ref # 92015)	92015-1904	1
GROMMET (Ref # 92071)	92071-1131	2
COLLAR (Ref # 92152)	92152-0295	2
DAMPER (Ref # 92160)	92160-1613	10
DAMPER (Ref # 92161)	92161-0266	2
BOLT-FLANGED,6X16 (Ref # 130)	130BA0616	2

© 2026 Kawasaki Motors Corp., U.S.A.