2023 VULCAN® 1700 VOYAGER® ABS

PARTS DIAGRAM

Frame Fittings

F2131

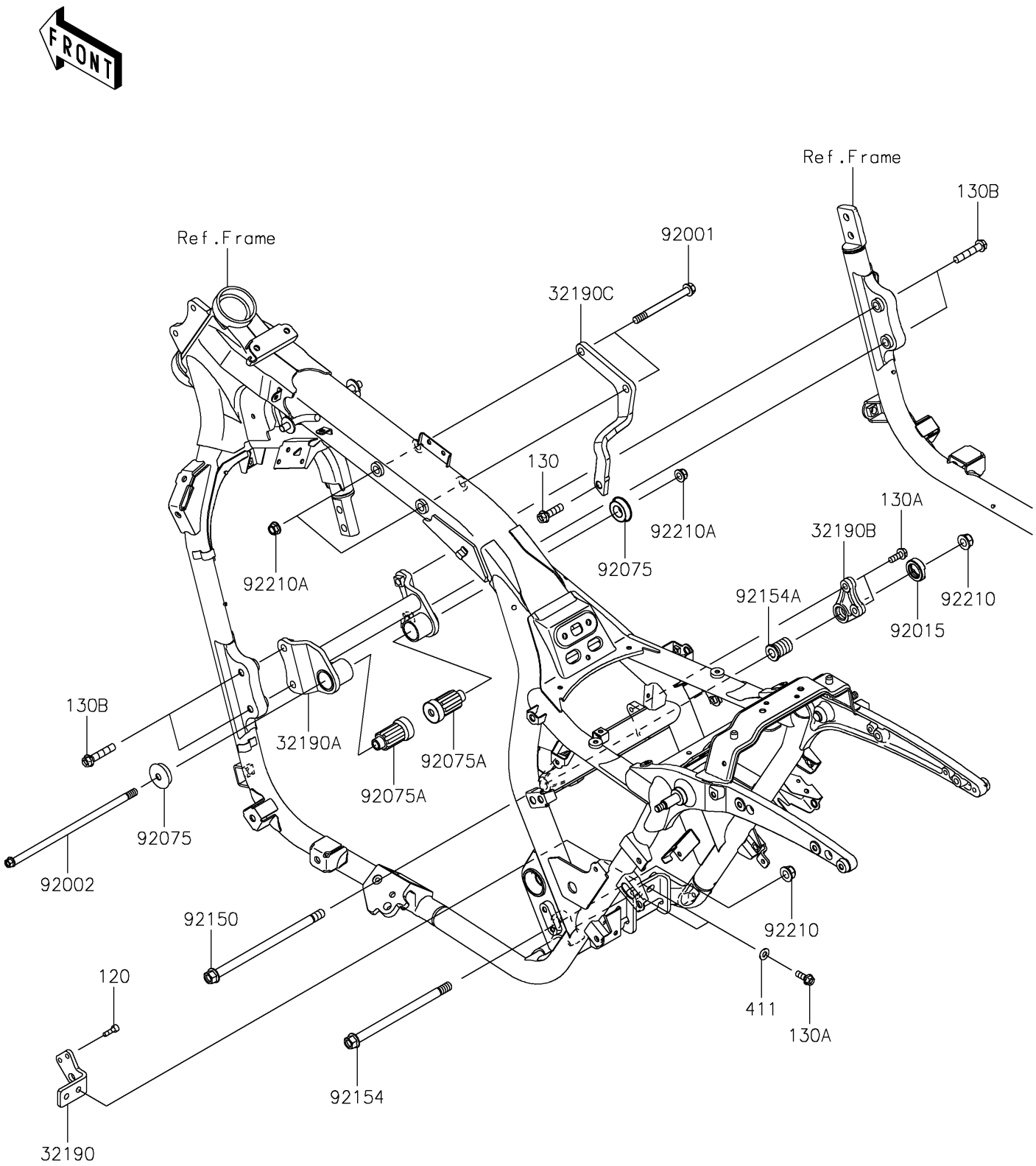

© 2026 Kawasaki Motors Corp., U.S.A.

2023 VULCAN® 1700 VOYAGER® ABS

Kawasaki
Let the Good Times Roll®

PARTS LIST

Frame Fittings

ITEM NAME	PART NUMBER	QUANTITY
BRACKET-ENGINE,RR,LWR (Ref # 32190)	32190-0396	1
BRACKET-ENGINE,FR,F.S.BLACK (Ref # 32190A)	32190-0410-18R	1
BRACKET-ENGINE,RR,UPP,BLACK (Ref # 32190B)	32190-0446-18R	1
BRACKET-ENGINE,CYLINDER HEAD (Ref # 32190C)	32190-0452	1
BOLT,FLANGED,10X110 (Ref # 92001)	92001-1602	2
BOLT,FLANGED,10X260 (Ref # 92002)	92002-1454	1
NUT,ENGINE MOUNT,22MM (Ref # 92015)	92015-1846	1
DAMPER,ENGINE MOUNT (Ref # 92075)	92075-1738	2
DAMPER,ENGINE MOUNT,MAIN (Ref # 92075A)	92075-1739	2
BOLT,FLANGED,12X228 (Ref # 92150)	92150-1952	1
BOLT,FLANGED,12X200 (Ref # 92154)	92154-0244	1
BOLT,ENGINE MOUNT,22X33.5 (Ref # 92154A)	92154-0245	1
NUT,LOCK,FLANGED,12MM (Ref # 92210)	92210-0110	2
NUT,LOCK,FLANGED,10MM (Ref # 92210A)	92210-1081	3
BOLT-SOCKET,6X20 (Ref # 120)	120CA0620	2
BOLT-FLANGED,10X35 (Ref # 130)	130BA1035	1
BOLT-FLANGED,8X22 (Ref # 130A)	130BB0822	4
BOLT-FLANGED,10X50 (Ref # 130B)	130BB1050	4
WASHER-PLAIN,8.5X18X1.6 (Ref # 411)	411AB0800	2

© 2026 Kawasaki Motors Corp., U.S.A.