2025 Vulcan 1700 Voyager ABS

PARTS DIAGRAM

Ignition System

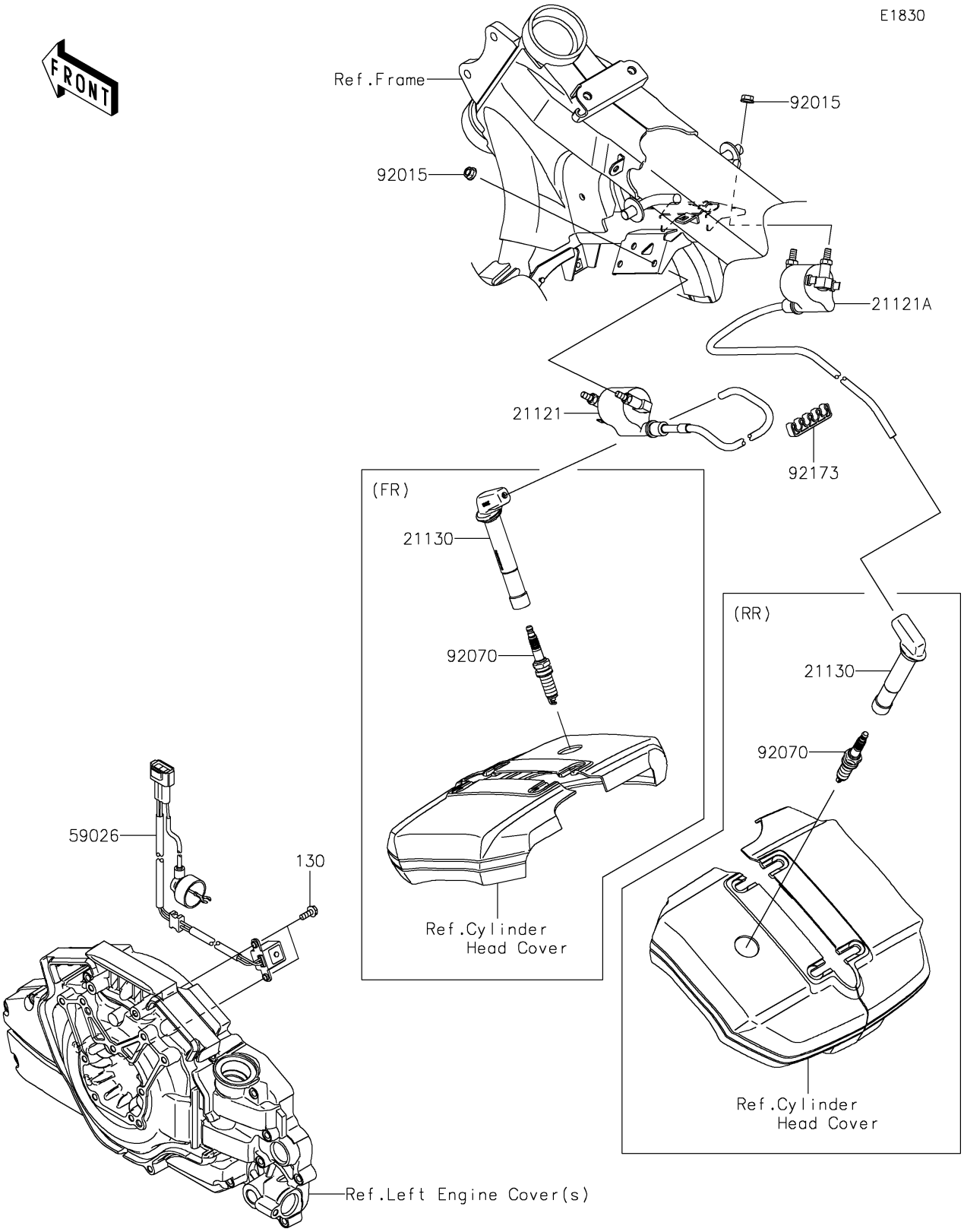

© 2026 Kawasaki Motors Corp., U.S.A.

2025 Vulcan 1700 Voyager ABS

PARTS LIST

Ignition System

ITEM NAME	PART NUMBER	QUANTITY
COIL-IGNITION,FR (Ref # 21121)	21121-0052	1
COIL-IGNITION,RR (Ref # 21121A)	21121-0053	1
CAP-SPARK PLUG (Ref # 21130)	21130-0008	2
COIL-PULSING (Ref # 59026)	59026-0029	1
NUT,FLANGED,6MM (Ref # 92015)	92015-1367	4
PLUG-SPARK,ILZKAR7B11(NGK) (Ref # 92070)	92070-0036	2
CLAMP (Ref # 92173)	92173-0149	1
BOLT-FLANGED,5X14 (Ref # 130)	130BA0514	2

© 2026 Kawasaki Motors Corp., U.S.A.