2023 VULCAN® 1700 VOYAGER® ABS

PARTS DIAGRAM

Fuel Injection

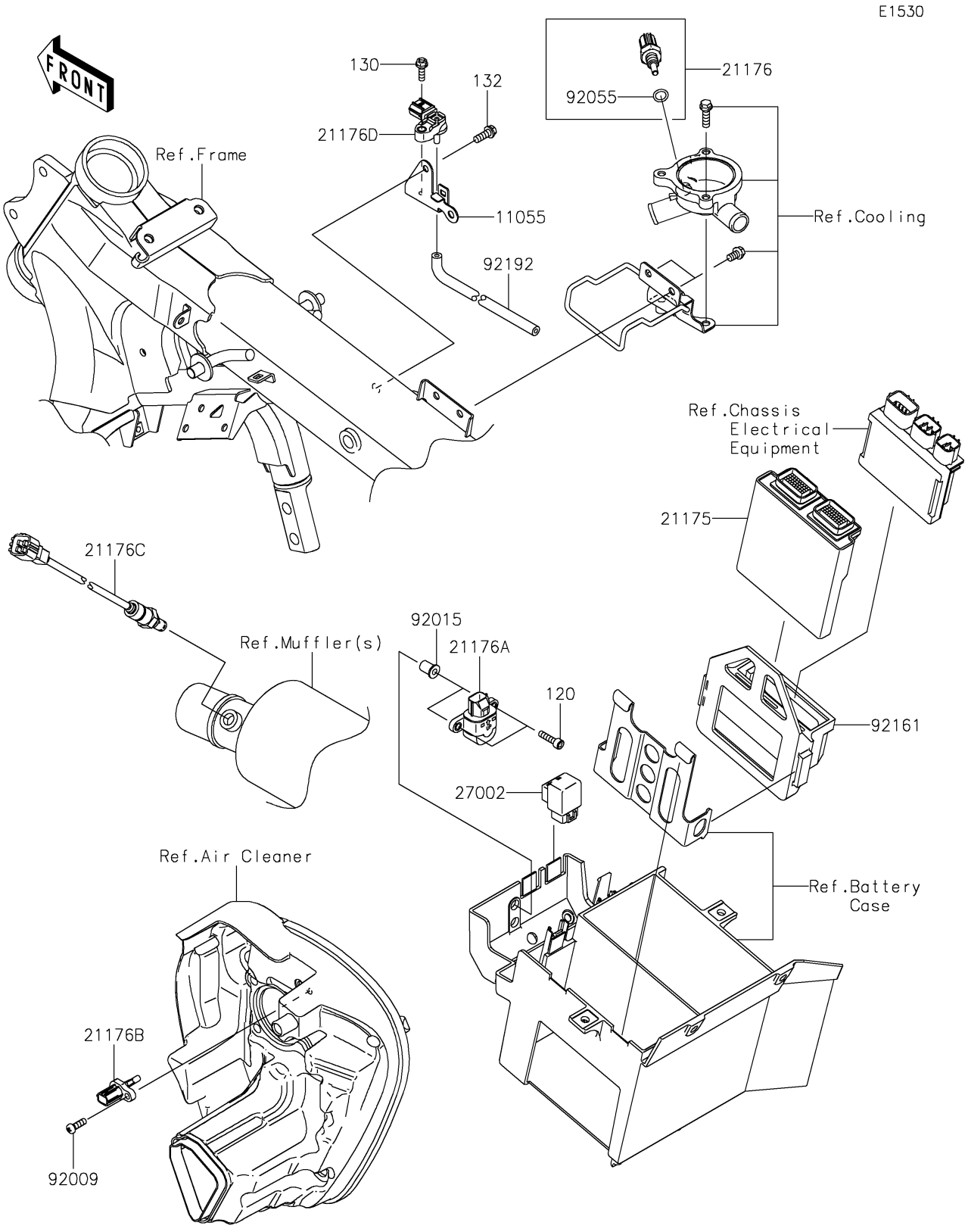

© 2026 Kawasaki Motors Corp., U.S.A.

2023 VULCAN® 1700 VOYAGER® ABS

PARTS LIST

Fuel Injection

ITEM NAME	PART NUMBER	QUANTITY
BRACKET (Ref # 11055)	11055-0569	1
CONTROL UNIT-ELECTRONIC (Ref # 21175)	21175-0927	1
SENSOR,WATER TEMP (Ref # 21176)	21176-0009	1
SENSOR (Ref # 21176A)	21176-0025	1
SENSOR,AIR TEMPERATURE (Ref # 21176B)	21176-0048	1
SENSOR,OXYGEN (Ref # 21176C)	21176-0090	1
SENSOR,PRESSURE (Ref # 21176D)	21176-0111	1
RELAY-ASSY (Ref # 27002)	27002-1062	1
SCREW,TAPPING,5X16 (Ref # 92009)	92009-1984	1
NUT,WELL,5MM (Ref # 92015)	92015-1757	2
RING-O,9.5X1.9 (Ref # 92055)	92055-0016	1
DAMPER (Ref # 92161)	92161-0092	1
TUBE,FITTING-ASV (Ref # 92192)	92192-0354	1
BOLT-SOCKET,5X20 (Ref # 120)	120CA0520	2
BOLT-FLANGED,5X16 (Ref # 130)	130BA0516	1
BOLT-FLANGED-SMALL,6X16 (Ref # 132)	132BA0616	1

© 2026 Kawasaki Motors Corp., U.S.A.