2023 NINJA® 650 KRT EDITION

PARTS DIAGRAM

Turn Signals

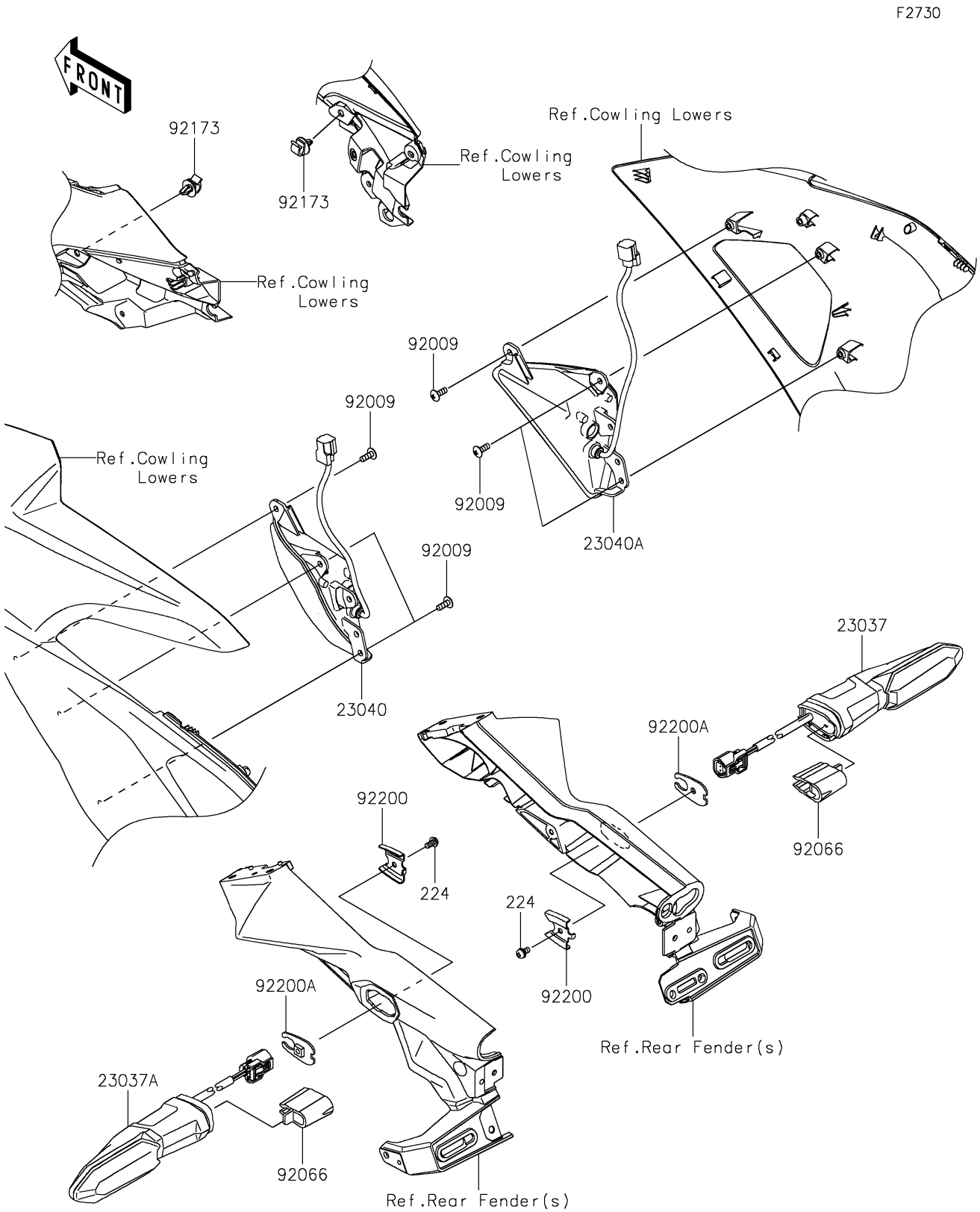

© 2026 Kawasaki Motors Corp., U.S.A.

2023 NINJA® 650 KRT EDITION

PARTS LIST

Turn Signals

ITEM NAME	PART NUMBER	QUANTITY
LAMP-ASSY-SIGNAL,LED,RH (Ref # 23037)	23037-0473	1
LAMP-ASSY-SIGNAL,LED,LH (Ref # 23037A)	23037-0561	1
LAMP-SIGNAL,LED,FR,LH (Ref # 23040)	23040-0157	1
LAMP-SIGNAL,LED,FR,RH (Ref # 23040A)	23040-0158	1
SCREW,TAPPING,5X14 (Ref # 92009)	92009-1197	6
PLUG,SIGNAL LAMP (Ref # 92066)	92066-0919	2
CLAMP,CABLE CLIP (Ref # 92173)	92173-1022	2
WASHER (Ref # 92200)	92200-0855	2
WASHER,SIGNAL LAMP (Ref # 92200A)	92200-2294	2
SCREW-PAN-WP-CROS,4X8 (Ref # 224)	224AB0408	2

© 2026 Kawasaki Motors Corp., U.S.A.