2023 NINJA® 650 KRT EDITION

PARTS DIAGRAM

Headlight(s)

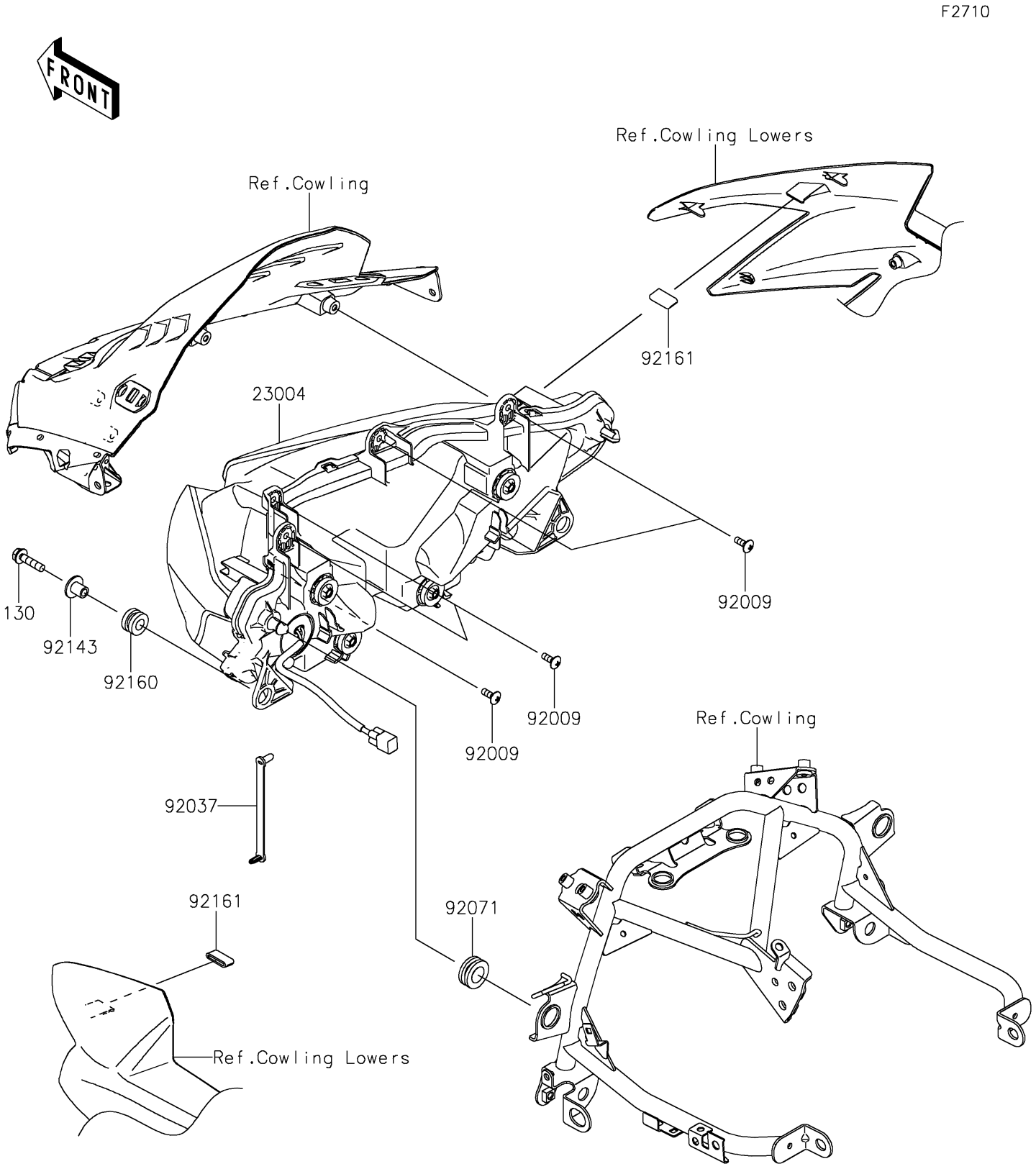

© 2026 Kawasaki Motors Corp., U.S.A.

2023 NINJA® 650 KRT EDITION

PARTS LIST

Headlight(s)

ITEM NAME	PART NUMBER	QUANTITY
LAMP-HEAD,LED (Ref # 23004)	23004-0423	1
SCREW,TAPPING,5X14 (Ref # 92009)	92009-1197	5
CLAMP,SPEED,L=80.5 (Ref # 92037)	92037-1903	1
GROMMET (Ref # 92071)	92071-1131	2
COLLAR (Ref # 92143)	92143-1353	2
DAMPER,10X20X12 (Ref # 92160)	92160-1167	2
DAMPER,12X23 (Ref # 92161)	92161-1367	2
BOLT-FLANGED,6X25 (Ref # 130)	130BA0625	2

© 2026 Kawasaki Motors Corp., U.S.A.