2023 NINJA® 650 KRT EDITION

PARTS DIAGRAM

Cables

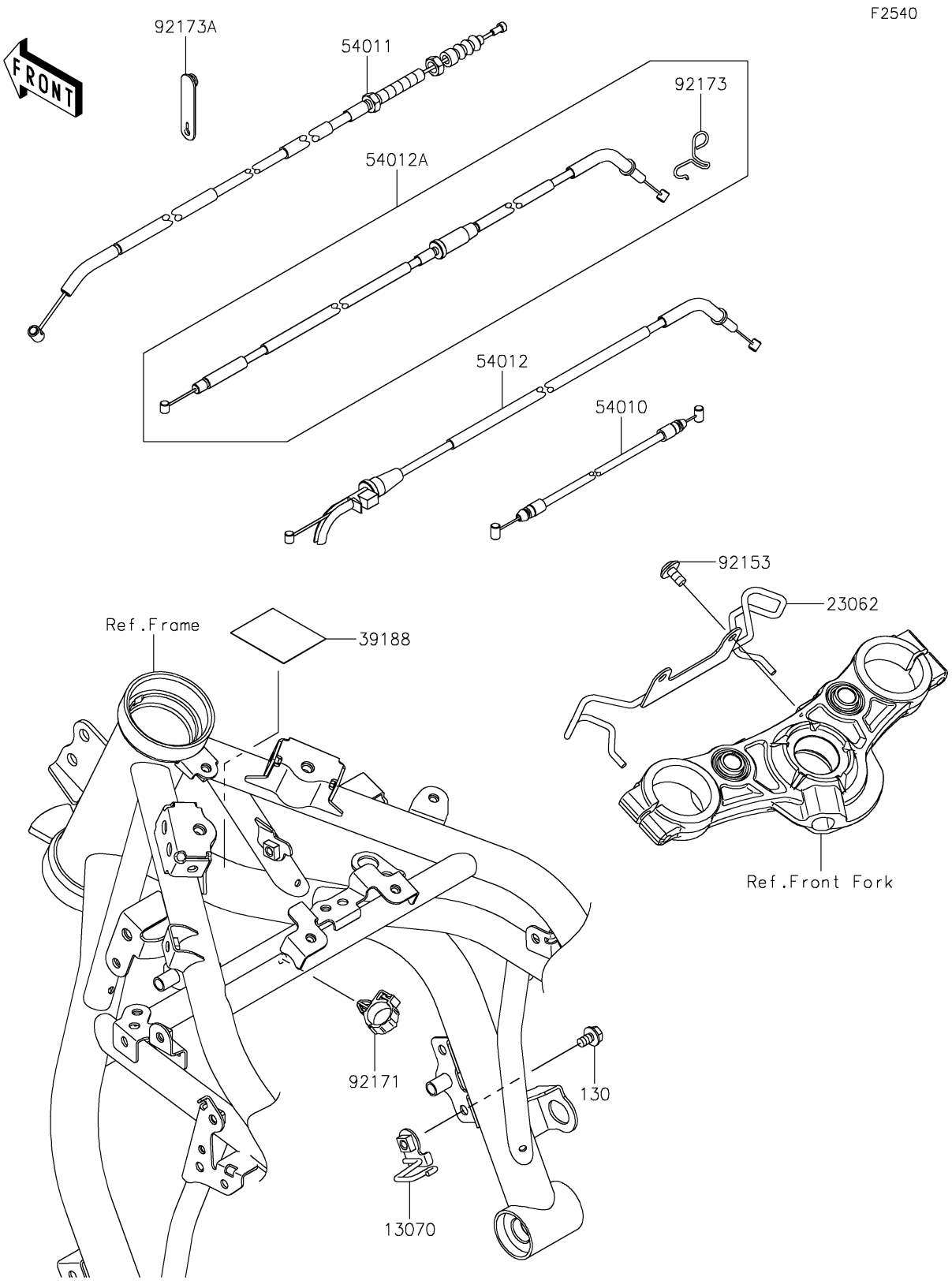

© 2026 Kawasaki Motors Corp., U.S.A.

2023 NINJA® 650 KRT EDITION

PARTS LIST

Cables

ITEM NAME	PART NUMBER	QUANTITY
GUIDE,CLUTCH CABLE (Ref # 13070)	13070-0841	1
BRACKET-COMP,GUIDE (Ref # 23062)	23062-0926	1
TAPE,40X50 (Ref # 39188)	39188-0049	1
CABLE,SEAT LOCK (Ref # 54010)	54010-0612	1
CABLE-CLUTCH (Ref # 54011)	54011-0623	1
CABLE-THROTTLE,OPENING (Ref # 54012)	54012-0654	1
CABLE-THROTTLE,CLOSING (Ref # 54012A)	54012-0655	1
BOLT,SOCKET,6X12 (Ref # 92153)	92153-1948	2
CLAMP,BRAKE HOSE (Ref # 92171)	92171-0316	1
CLAMP,THROTTLE CABLE (Ref # 92173)	92173-0727	1
CLAMP (Ref # 92173A)	92173-2198	1
BOLT-FLANGED,6X10 (Ref # 130)	130BA0610	1

© 2026 Kawasaki Motors Corp., U.S.A.