2023 NINJA® 650 KRT EDITION

PARTS DIAGRAM

Front Brake

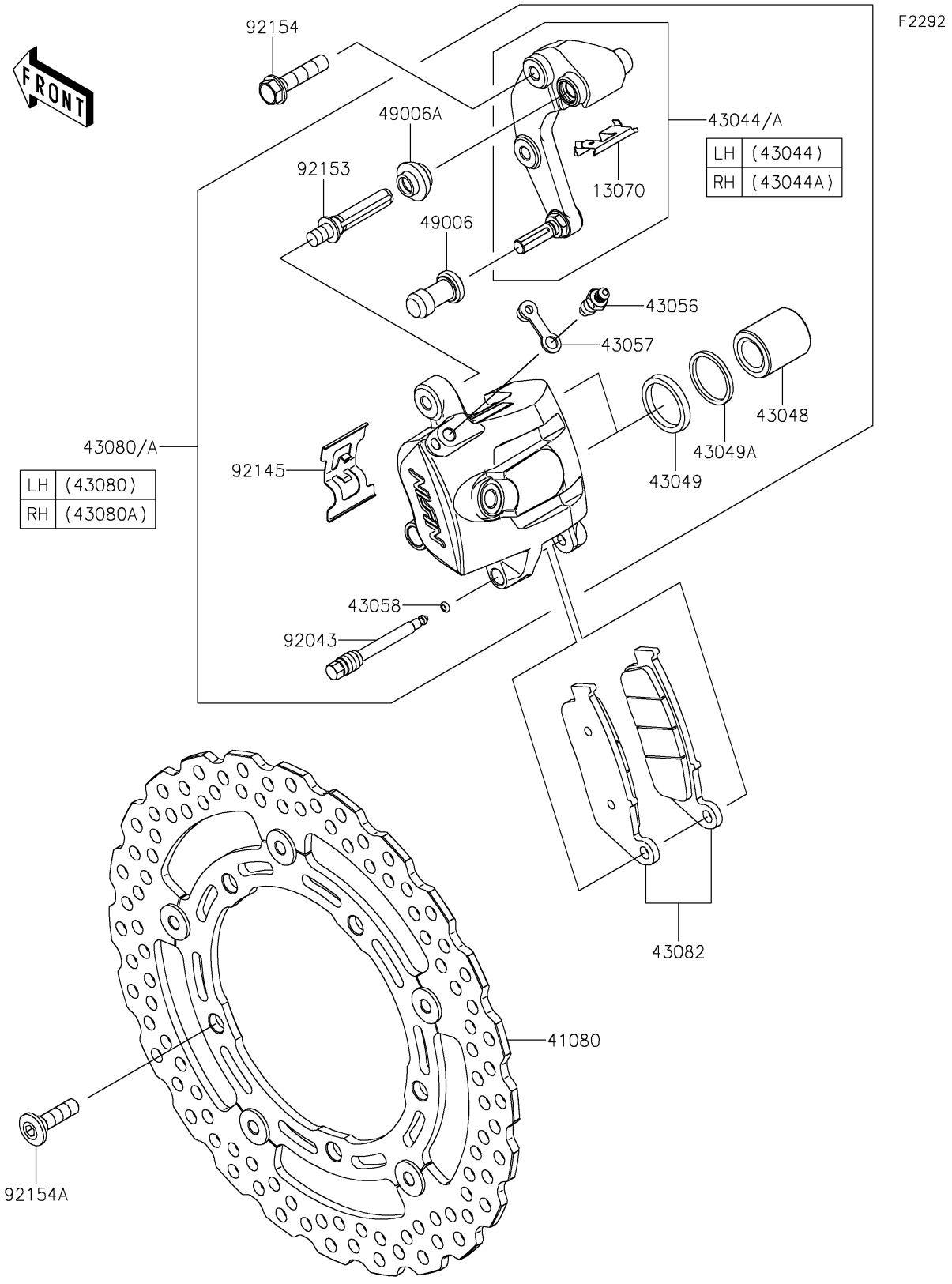

© 2026 Kawasaki Motors Corp., U.S.A.

2023 NINJA® 650 KRT EDITION

PARTS LIST

Front Brake

ITEM NAME	PART NUMBER	QUANTITY
GUIDE,BRAKE PAD (Ref # 13070)	13070-0077	2
DISC,BLACK+SIL (Ref # 41080)	41080-0666-11I	2
HOLDER-COMP-CALIPER,FR,LH (Ref # 43044)	43044-0078	1
HOLDER-COMP-CALIPER,FR,RH (Ref # 43044A)	43044-0079	1
PISTON-CALIPER (Ref # 43048)	43048-1068	4
PACKING,PISTON SEAL (Ref # 43049)	43049-1060	4
PACKING,PISTON SEAL (Ref # 43049A)	43049-1061	4
BREATHER (Ref # 43056)	43056-1055	2
CAP-BREATHER (Ref # 43057)	43057-1001	2
RING,STOPPER (Ref # 43058)	43058-1100	2
CALIPER-SUB-ASSY,FR,LH,BLACK (Ref # 43080)	43080-0177-DJ	1
CALIPER-SUB-ASSY,FR,RH,BLACK (Ref # 43080A)	43080-0178-DJ	1
PAD-ASSY-BRAKE (Ref # 43082)	43082-0165	2
BOOT,CALIPER (Ref # 49006)	49006-1088	2
BOOT,CALIPER (Ref # 49006A)	49006-1242	2
PIN,HANGER (Ref # 92043)	92043-0820	2
SPRING,PAD (Ref # 92145)	92145-0524	2
BOLT (Ref # 92153)	92153-1872	2
BOLT,FLANGED,8X35 (Ref # 92154)	92154-1646	4
BOLT,SOCKET,8X30 (Ref # 92154A)	92154-1865	10

© 2026 Kawasaki Motors Corp., U.S.A.