2023 NINJA® 650 KRT EDITION

PARTS DIAGRAM

Footrests

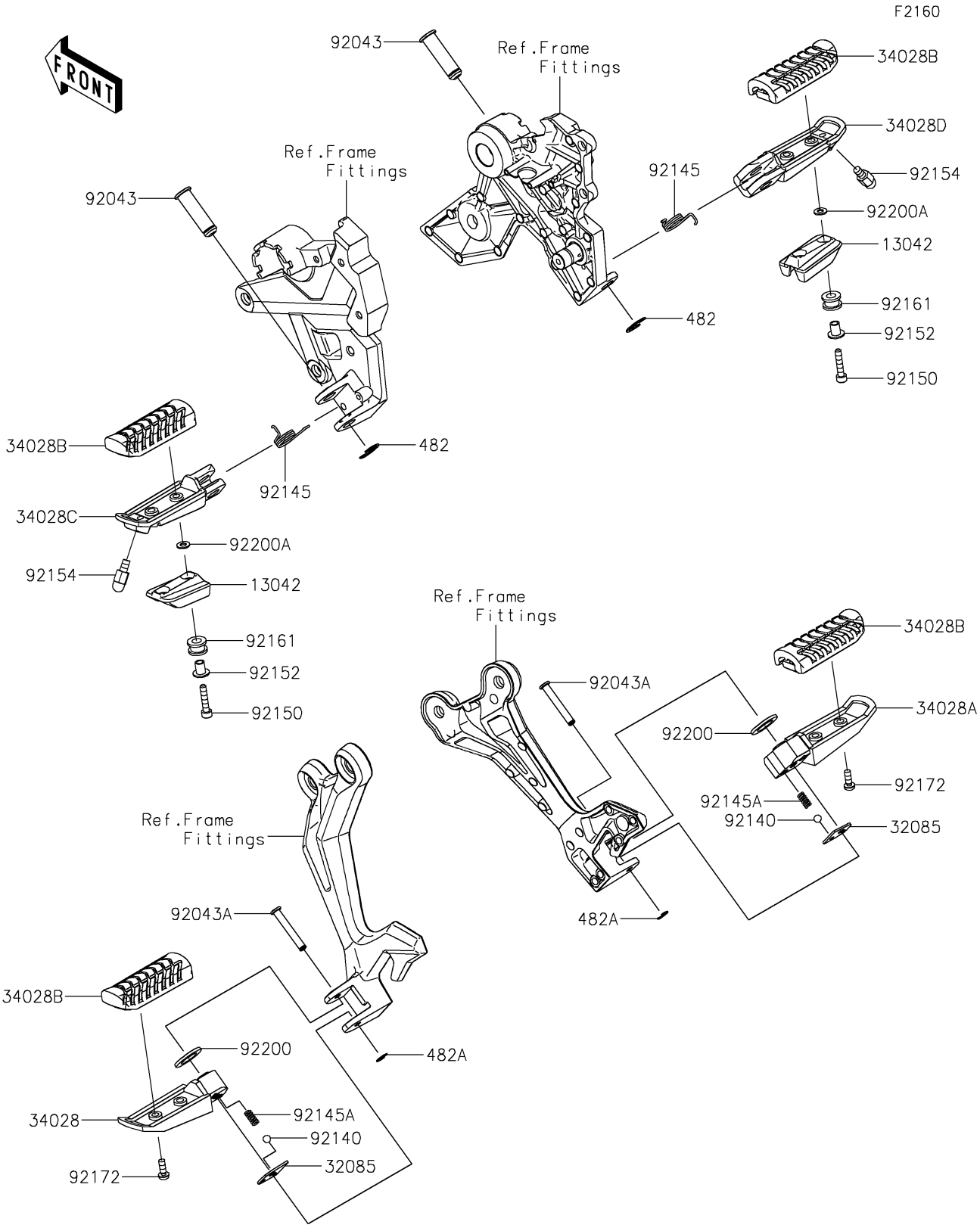

© 2026 Kawasaki Motors Corp., U.S.A.

2023 NINJA® 650 KRT EDITION

PARTS LIST

Footrests

ITEM NAME	PART NUMBER	QUANTITY
WEIGHT,STEP (Ref # 13042)	13042-0759	2
STOPPER (Ref # 32085)	32085-0801	2
STEP,RR,LH (Ref # 34028)	34028-0314	1
STEP,RR,RH (Ref # 34028A)	34028-0315	1
STEP,RUBBER (Ref # 34028B)	34028-0349	4
STEP,FR,LH (Ref # 34028C)	34028-0350	1
STEP,FR,RH (Ref # 34028D)	34028-0351	1
PIN,12X37.5 (Ref # 92043)	92043-0026	2
PIN,6X40 (Ref # 92043A)	92043-0200	2
BALL,6.35MM (Ref # 92140)	92140-0008	2
SPRING,STEP RETURN (Ref # 92145)	92145-0723	2
SPRING (Ref # 92145A)	92145-1319	2
BOLT,SOCKET,5X25 (Ref # 92150)	92150-1684	4
COLLAR (Ref # 92152)	92152-2596	4
BOLT,BANK SENSOR (Ref # 92154)	92154-0838	2
DAMPER,8X16X10 (Ref # 92161)	92161-1935	4
SCREW-PAN-WP-CROS,5X14 (Ref # 92172)	92172-0473	4
WASHER,16X26X2.3 (Ref # 92200)	92200-0772	2
WASHER,5.3X11X1 (Ref # 92200A)	92200-0973	4
CIRCLIP-TYPE-E,10MM (Ref # 482)	482EA0100	2
CIRCLIP-TYPE-E (Ref # 482A)	482EA5000	2

© 2026 Kawasaki Motors Corp., U.S.A.