2023 NINJA® 650 KRT EDITION

PARTS DIAGRAM

Frame Fittings

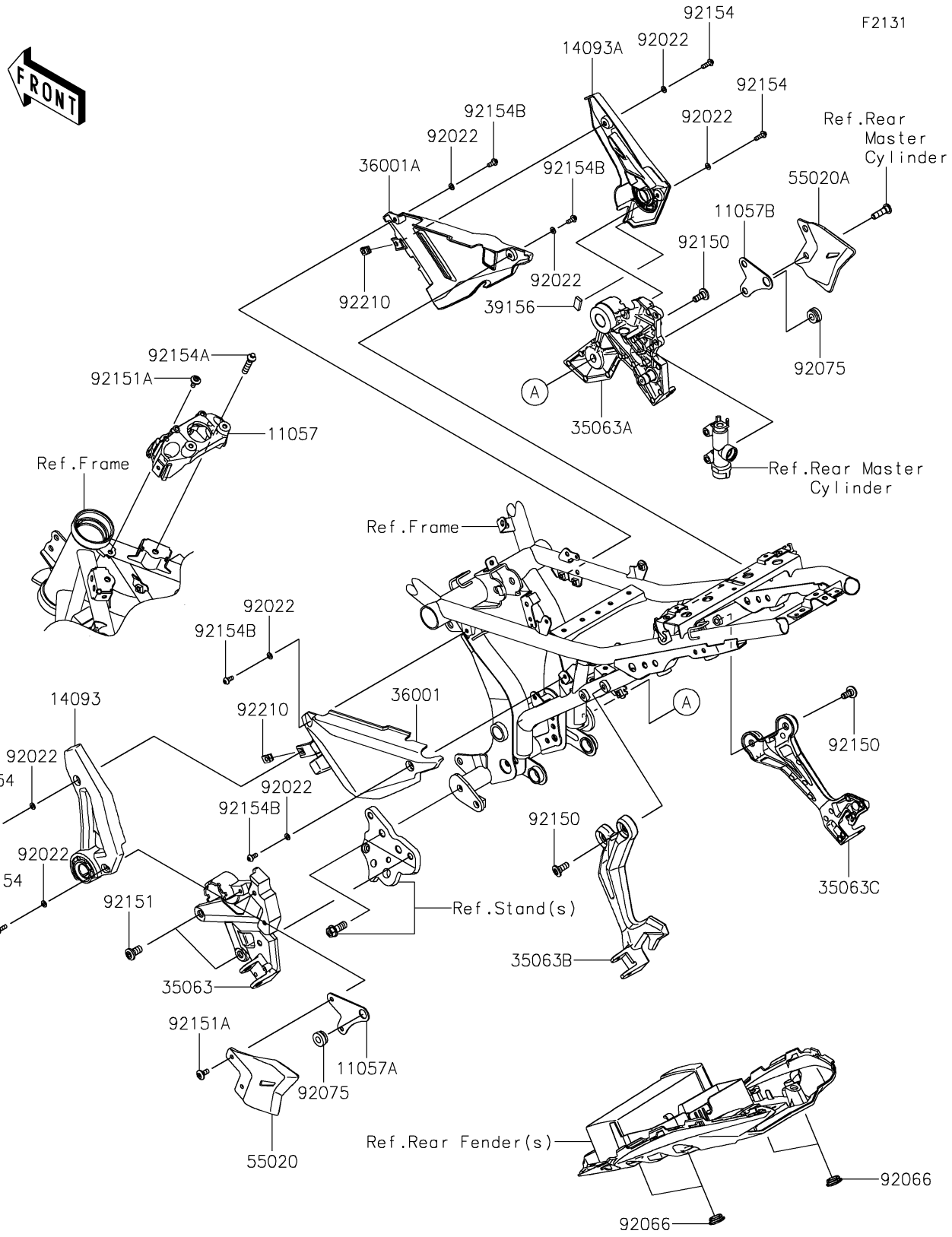

© 2026 Kawasaki Motors Corp., U.S.A.

2023 NINJA® 650 KRT EDITION

PARTS LIST

Frame Fittings

ITEM NAME	PART NUMBER	QUANTITY
BRACKET,IG. SWITCH (Ref # 11057)	11057-0079	1
BRACKET,STEP STAY,LH (Ref # 11057A)	11057-0476	1
BRACKET,STEP STAY,RH (Ref # 11057B)	11057-0477	1
COVER,STEP,LH,F.S.BLACK (Ref # 14093)	14093-0480-18T	1
COVER,STEP,RH,F.S.BLACK (Ref # 14093A)	14093-0623-18T	1
STAY,STEP,FR,LH,F.S.BLACK (Ref # 35063)	35063-1348-18R	1
STAY,STEP,FR,RH,F.S.BLACK (Ref # 35063A)	35063-1349-18R	1
STAY,STEP,RR,LH,F.S.BLACK (Ref # 35063B)	35063-1350-18R	1
STAY,STEP,RR,RH,F.S.BLACK (Ref # 35063C)	35063-1351-18R	1
COVER-SIDE,LH (Ref # 36001)	36001-0642	1
COVER-SIDE,RH (Ref # 36001A)	36001-0643	1
PAD,20X10X4 (Ref # 39156)	39156-2839	1
GUARD,HEEL,LH (Ref # 55020)	55020-1956	1
GUARD,HEEL,RH (Ref # 55020A)	55020-1957	1
WASHER,5.1X10X1.0 (Ref # 92022)	92022-1977	8
PLUG (Ref # 92066)	92066-0096	4
DAMPER (Ref # 92075)	92075-277	2
BOLT,SOCKET,8X20 (Ref # 92150)	92150-1760	5
BOLT,SOCKET,10X20 (Ref # 92151)	92151-1557	2
BOLT,SOCKET,6X14 (Ref # 92151A)	92151-1654	3
BOLT,SOCKET,5X16 (Ref # 92154)	92154-0209	4
BOLT,TORX,8X35 (Ref # 92154A)	92154-0730	2
BOLT,SOCKET,5X12 (Ref # 92154B)	92154-0917	4
NUT,PLATE,5MM (Ref # 92210)	92210-0935	2

© 2026 Kawasaki Motors Corp., U.S.A.