2023 NINJA® 650 KRT EDITION

PARTS DIAGRAM

Generator

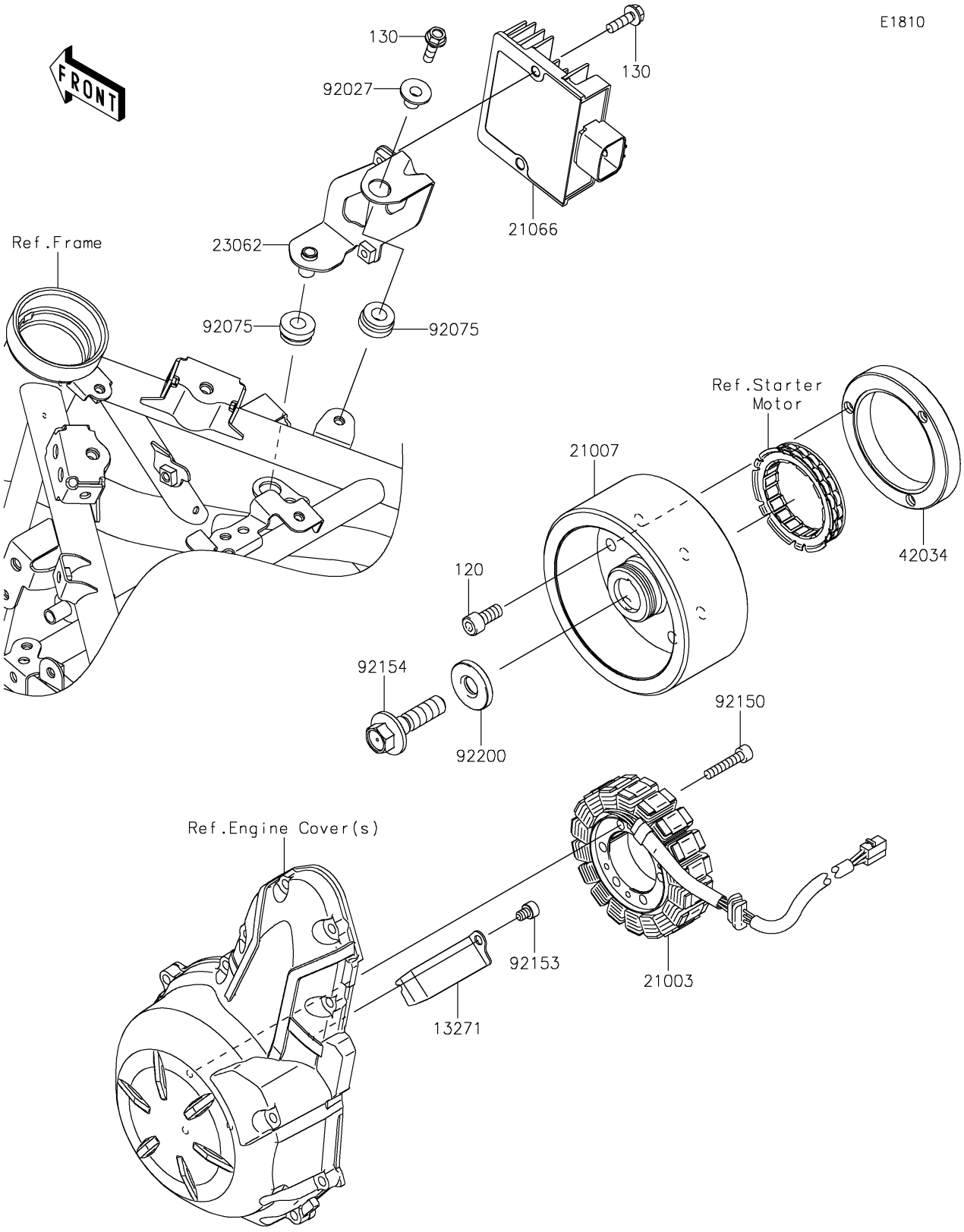

© 2026 Kawasaki Motors Corp., U.S.A.

2023 NINJA® 650 KRT EDITION

PARTS LIST

Generator

ITEM NAME	PART NUMBER	QUANTITY
PLATE (Ref # 13271)	13271-0952	1
STATOR (Ref # 21003)	21003-0206	1
ROTOR (Ref # 21007)	21007-0601	1
REGULATOR-VOLTAGE (Ref # 21066)	21066-0750	1
BRACKET-COMP,REGULATOR (Ref # 23062)	23062-0906	1
COUPLING (Ref # 42034)	42034-1143	1
COLLAR,FLANGED,L=12.1,BLACK (Ref # 92027)	92027-1651	1
DAMPER (Ref # 92075)	92075-277	2
BOLT,SOCKET,6X30 (Ref # 92150)	92150-1433	3
BOLT,SOCKET,6X8 (Ref # 92153)	92153-1414	1
BOLT,FLANGED,12X45 (Ref # 92154)	92154-1812	1
WASHER,12X33X5 (Ref # 92200)	92200-0220	1
BOLT-SOCKET,8X18 (Ref # 120)	120CA0818	3
BOLT-FLANGED,6X20 (Ref # 130)	130BA0620	3

© 2026 Kawasaki Motors Corp., U.S.A.