2023 NINJA® 650 KRT EDITION

PARTS DIAGRAM

Throttle

E1510

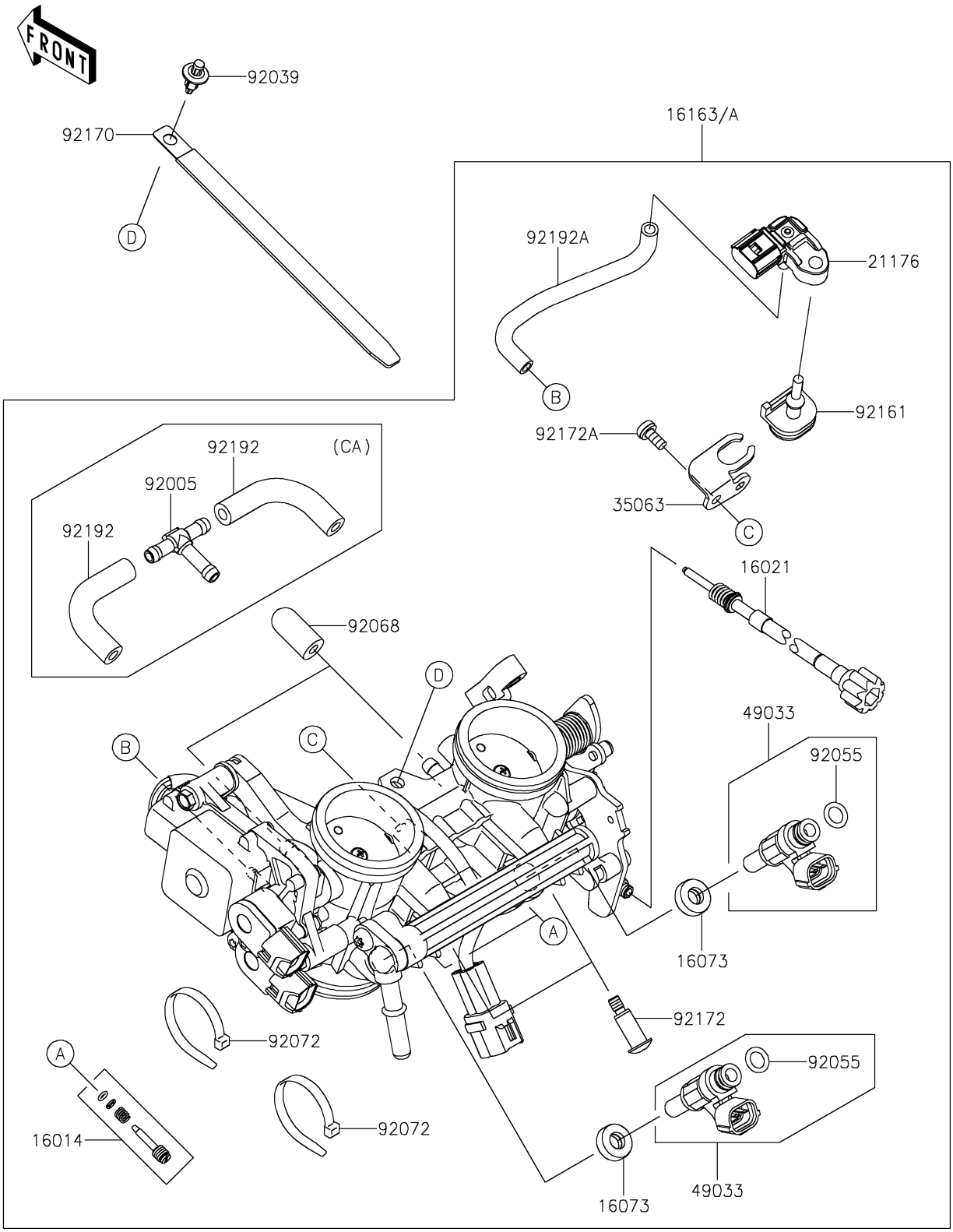

© 2026 Kawasaki Motors Corp., U.S.A.

2023 NINJA® 650 KRT EDITION

PARTS LIST

Throttle

ITEM NAME	PART NUMBER	QUANTITY
SCREW-PILOT AIR (Ref # 16014)	16014-0002	2
SCREW-THROTTLE STOP (Ref # 16021)	16021-0034	1
INSULATOR (Ref # 16073)	16073-0129	2
THROTTLE-ASSY (Ref # 16163)	16163-1271	1
SENSOR,PRESSURE (Ref # 21176)	21176-0906	1
STAY (Ref # 35063)	35063-1528	1
NOZZLE-INJECTION (Ref # 49033)	49033-0568	2
RIVET (Ref # 92039)	92039-0707	1
RING-O,INJECTION NOZZLE (Ref # 92055)	92055-0124	2
PLUG,12X25 (Ref # 92068)	92068-006	2
BAND,SUB-HARNESS (Ref # 92072)	92072-0012	2
DAMPER (Ref # 92161)	92161-0673	1
CLAMP,L=150 (Ref # 92170)	92170-1114	1
SCREW,PIPE INJECTION (Ref # 92172)	92172-0064	2
SCREW (Ref # 92172A)	92172-0393	1
TUBE (Ref # 92192A)	92192-2368	1

© 2026 Kawasaki Motors Corp., U.S.A.