2023 NINJA® 650 KRT EDITION

PARTS DIAGRAM

Clutch

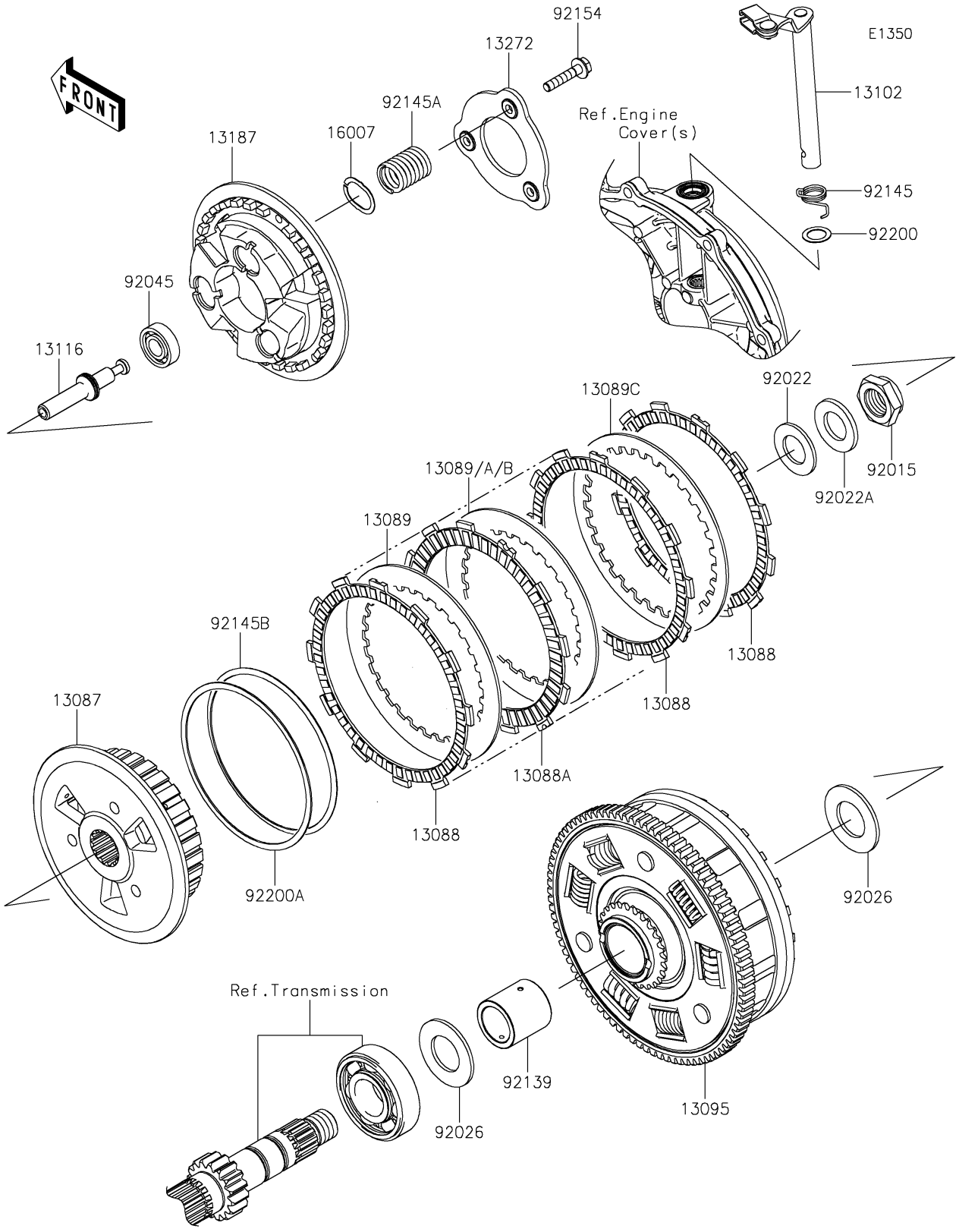

© 2026 Kawasaki Motors Corp., U.S.A.

2023 NINJA® 650 KRT EDITION

PARTS LIST

Clutch

ITEM NAME	PART NUMBER	QUANTITY
HUB-CLUTCH (Ref # 13087)	13087-0581	1
PLATE-FRICTION (Ref # 13088)	13088-0557	3
PLATE-FRICTION (Ref # 13088A)	13088-0566	4
PLATE-CLUTCH,T=2.0 (Ref # 13089)	13089-0021	5
PLATE-CLUTCH,T=1.6 (Ref # 13089A)	13089-0038	AR
PLATE-CLUTCH,T=2.3 (Ref # 13089B)	13089-0039	AR
PLATE-CLUTCH (Ref # 13089C)	13089-0558	1
HOUSING-COMP-CLUTCH (Ref # 13095)	13095-0585	1
RELEASE-COMP-CLUTCH (Ref # 13102)	13102-0070	1
ROD-PUSH (Ref # 13116)	13116-0734	1
PLATE-CLUTCH OPERATING (Ref # 13187)	13187-0029	1
PLATE (Ref # 13272)	13272-1303	1
SEAT-SPRING (Ref # 16007)	16007-0736	3
NUT,20MM (Ref # 92015)	92015-1555	1
WASHER,20.3X36X2.3 (Ref # 92022)	92022-1116	1
WASHER,20.3X36X3.7 (Ref # 92022A)	92022-1868	1
SPACER,25.5X47X2.5 (Ref # 92026)	92026-0716	2
BEARING-BALL,6001C3ML01 (Ref # 92045)	92045-1235	1
BUSHING (Ref # 92139)	92139-0710	1
SPRING,CLUTCH RELEASE (Ref # 92145)	92145-0897	1
SPRING (Ref # 92145A)	92145-1732	3
SPRING (Ref # 92145B)	92145-1765	1
BOLT,UPSET,6X30 (Ref # 92154)	92154-0997	3
WASHER,12X18.5X0.5 (Ref # 92200)	92200-1487	1
WASHER,T=1.0 (Ref # 92200A)	92200-1579	1

© 2026 Kawasaki Motors Corp., U.S.A.