2023 NINJA® 650 KRT EDITION

PARTS DIAGRAM

Muffler(s)

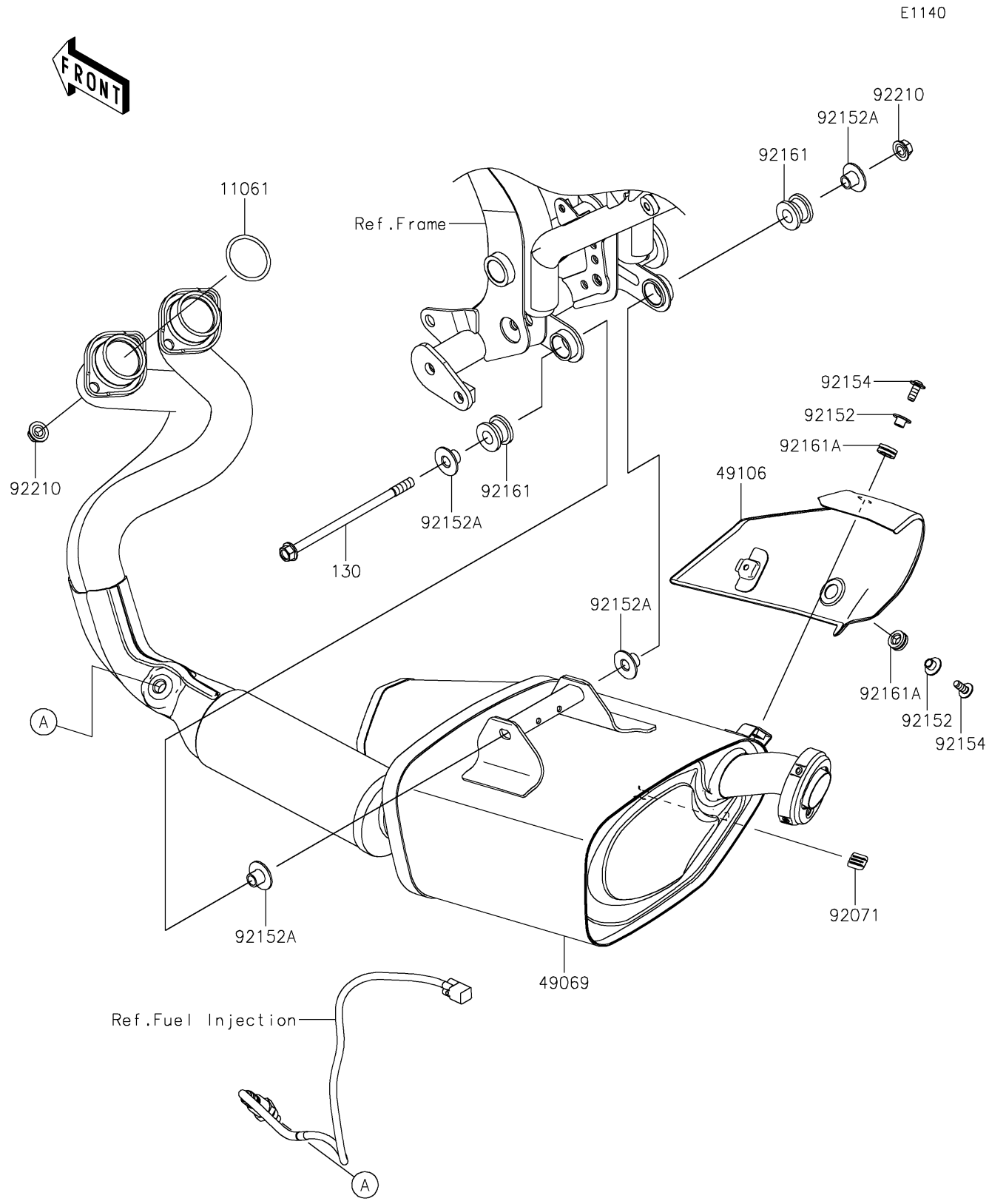

© 2026 Kawasaki Motors Corp., U.S.A.

2023 NINJA® 650 KRT EDITION

PARTS LIST

Muffler(s)

ITEM NAME	PART NUMBER	QUANTITY
GASKET,EXHAUST PIPE HOLDER (Ref # 11061)	11061-1373	2
MUFFLER-ASSY (Ref # 49069)	49069-0885	1
COVER-MUFFLER (Ref # 49106)	49106-0796	1
GROMMET (Ref # 92071)	92071-0760	1
COLLAR,6.3X8.3X16 (Ref # 92152)	92152-1602	2
COLLAR (Ref # 92152A)	92152-2367	4
BOLT,SOCKET,6X14 (Ref # 92154)	92154-0856	2
DAMPER (Ref # 92161)	92161-0193	2
DAMPER (Ref # 92161A)	92161-1475	2
NUT,8MM (Ref # 92210)	92210-1114	5
BOLT-FLANGED,8X145 (Ref # 130)	130CD08145	1

© 2026 Kawasaki Motors Corp., U.S.A.