2024 Ninja® 650

PARTS DIAGRAM

Gear Change Mechanism

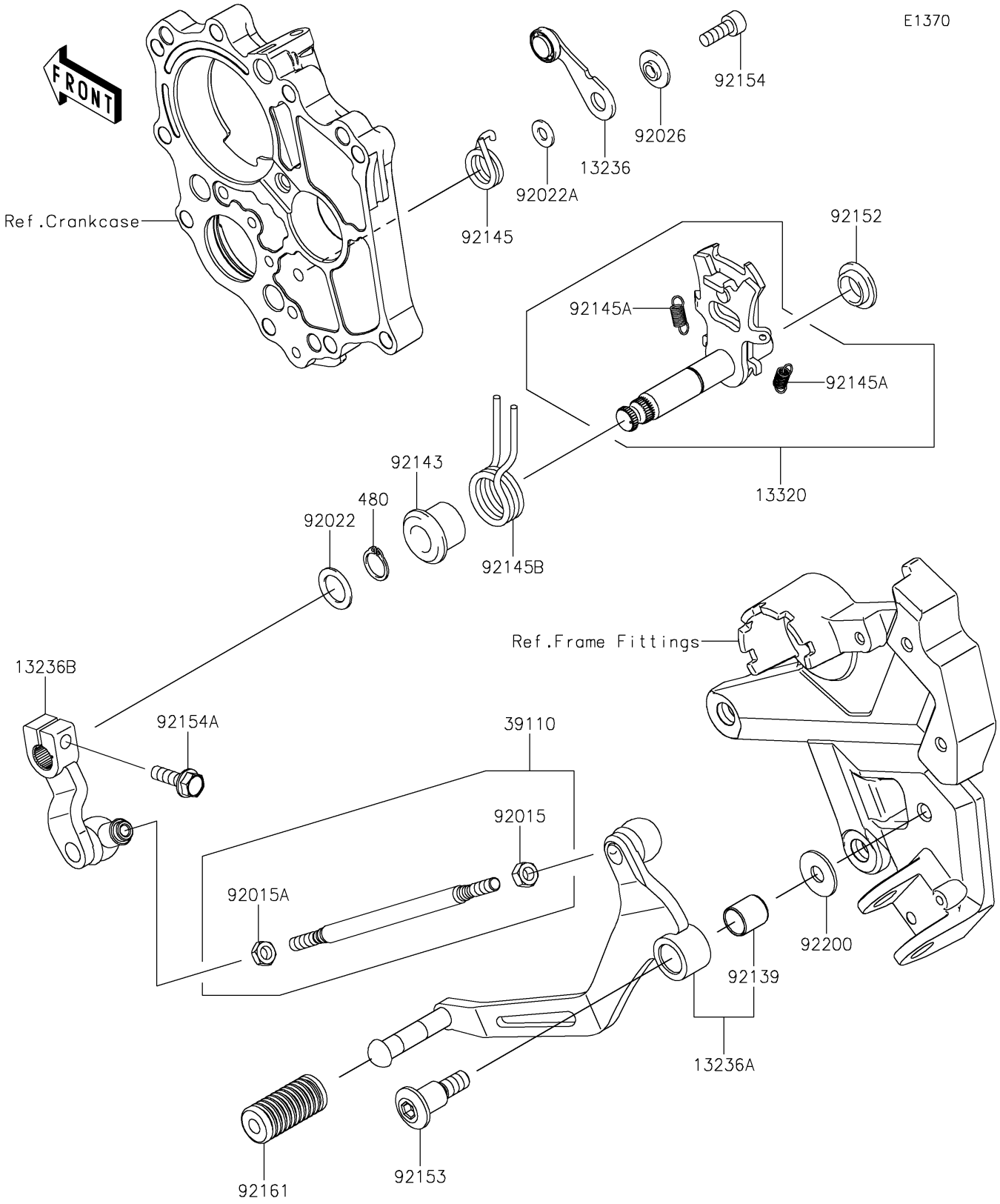

© 2026 Kawasaki Motors Corp., U.S.A.

2024 Ninja® 650

PARTS LIST

Gear Change Mechanism

Kawasaki
Let the Good Times Roll®

ITEM NAME	PART NUMBER	QUANTITY
LEVER-COMP,POSITION (Ref # 13236)	13236-0170	1
LEVER-COMP,CHANGE PEDAL (Ref # 13236A)	13236-0778	1
LEVER-COMP,ENGINE SIDE (Ref # 13236B)	13236-0779	1
LEVER-ASSY,CHANGE SHAFT (Ref # 13320)	13320-0032	1
ROD-ASSY-TIE (Ref # 39110)	39110-1124	1
NUT,6MM (Ref # 92015)	92015-1443	1
NUT,LEFT HANDED,6MM (Ref # 92015A)	92015-1444	1
WASHER,13.3X20X1 (Ref # 92022)	92022-1496	1
WASHER,6X12.8X1.2 (Ref # 92022A)	92022-1827	1
SPACER (Ref # 92026)	92026-1217	1
BUSHING (Ref # 92139)	92139-0023	1
COLLAR,RETURN SPRING (Ref # 92143)	92143-1498	1
SPRING,POSITION (Ref # 92145)	92145-0304	1
SPRING,5.5X0.7X18 (Ref # 92145A)	92145-0703	2
SPRING,CHANGE SHAFT RETURN (Ref # 92145B)	92145-1774	1
COLLAR (Ref # 92152)	92152-1075	1
BOLT,SOCKET,8X16.7 (Ref # 92153)	92153-0446	1
BOLT,SOCKET,6X16 (Ref # 92154)	92154-0235	1
BOLT,FLANGED,6X20 (Ref # 92154A)	92154-2595	1
DAMPER,CHANGE PEDAL (Ref # 92161)	92161-2389	1
WASHER,8.0X22.0X1.5 (Ref # 92200)	92200-0174	1
CIRCLIP-TYPE-C,13MM (Ref # 480)	480J1300	1

© 2026 Kawasaki Motors Corp., U.S.A.