2022 NINJA® 1000SX

PARTS DIAGRAM

Headlight(s)

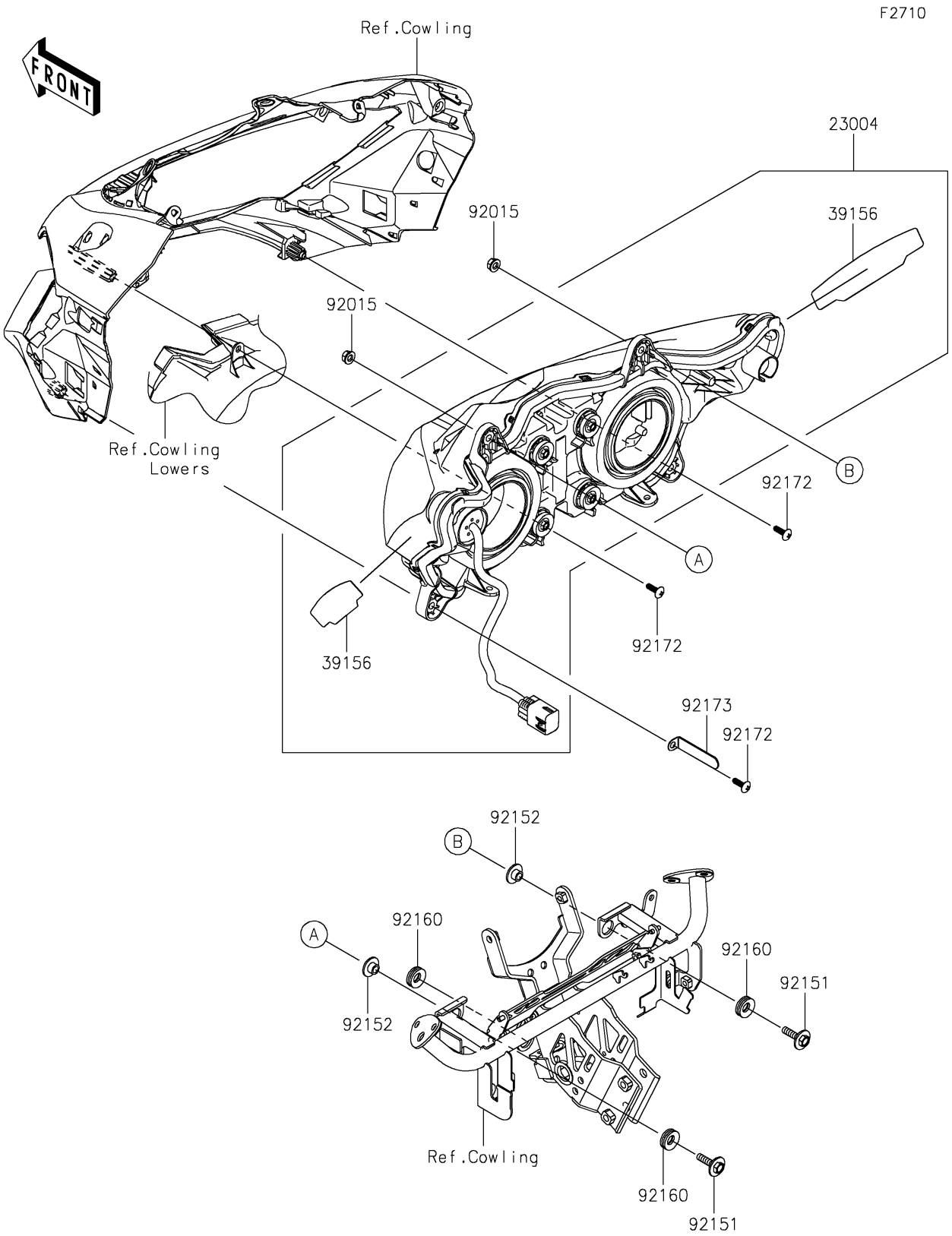

© 2026 Kawasaki Motors Corp., U.S.A.

2022 NINJA® 1000SX

PARTS LIST

Headlight(s)

ITEM NAME	PART NUMBER	QUANTITY
LAMP-HEAD,LED (Ref # 23004)	23004-0412	1
PAD (Ref # 39156)	39156-2153	2
NUT,FLANGED,6MM (Ref # 92015)	92015-1367	2
BOLT,6X25 (Ref # 92151)	92151-1241	2
COLLAR (Ref # 92152)	92152-1255	2
DAMPER (Ref # 92160)	92160-1278	3
SCREW,TAPPING,5X16 (Ref # 92172)	92172-0238	3
CLAMP (Ref # 92173)	92173-0923	1

© 2026 Kawasaki Motors Corp., U.S.A.