2022 NINJA® 1000SX

PARTS DIAGRAM

Engine Mount

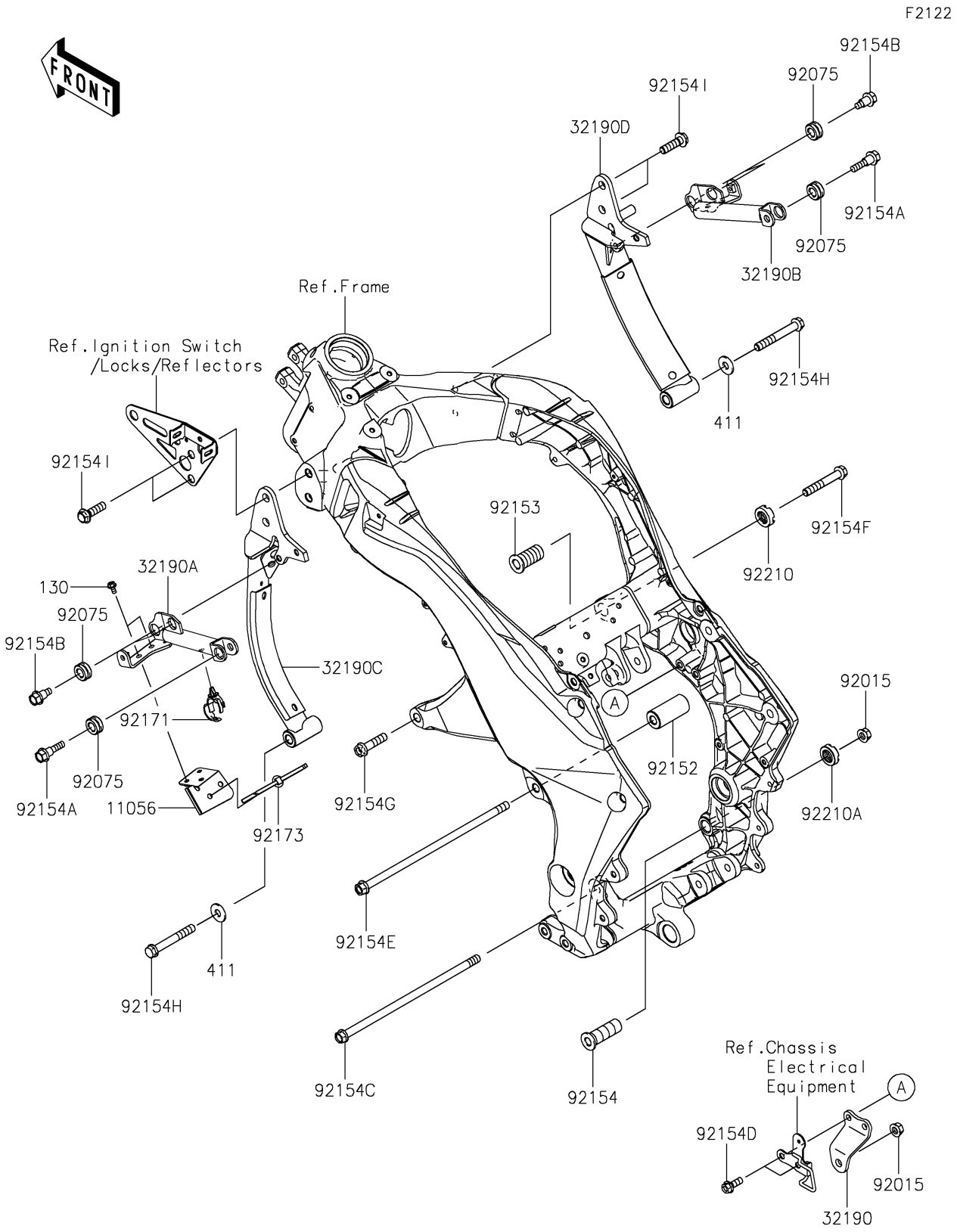

© 2026 Kawasaki Motors Corp., U.S.A.

2022 NINJA® 1000SX

PARTS LIST

Engine Mount

ITEM NAME	PART NUMBER	QUANTITY
BRACKET,HEAT SHIELD,LH (Ref # 11056)	11056-3781	1
BRACKET-ENGINE,CR CASE UPP,BLK (Ref # 32190)	32190-0458-18R	1
BRACKET-ENGINE,LH (Ref # 32190A)	32190-0582	1
BRACKET-ENGINE,RH (Ref # 32190B)	32190-0583	1
BRACKET-ENGINE,LH,F.S.BLACK (Ref # 32190C)	32190-0648-18R	1
BRACKET-ENGINE,RH,F.S.BLACK (Ref # 32190D)	32190-0649-18R	1
NUT,FLANGED,10MM (Ref # 92015)	92015-1180	2
DAMPER (Ref # 92075)	92075-1898	6
COLLAR,11X26X56.5 (Ref # 92152)	92152-0853	1
BOLT,SOCKET,20X43 (Ref # 92153)	92153-0488	1
BOLT,ENGINE MOUNT,18X53.5 (Ref # 92154)	92154-0267	1
BOLT,FLANGED,8X35 (Ref # 92154A)	92154-0742	2
BOLT,FLANGED,8X20 (Ref # 92154B)	92154-0749	4
BOLT,FLANGED,10X255 (Ref # 92154C)	92154-0827	1
BOLT,FLANGED,8X20 (Ref # 92154D)	92154-1852	2
BOLT,FLANGED,10X270 (Ref # 92154E)	92154-2309	1
BOLT,FLANGED,10X65 (Ref # 92154F)	92154-2310	1
BOLT,FLANGED,10X40 (Ref # 92154G)	92154-2311	1
BOLT,FLANGED,10X75 (Ref # 92154H)	92154-2312	2
BOLT,FLANGED,10X35 (Ref # 92154I)	92154-7111	4
CLAMP,20MM DIA. (Ref # 92171)	92171-0069	1
CLAMP (Ref # 92173)	92173-0742	1
NUT,20MM (Ref # 92210)	92210-0591	1
NUT,CASTLE,18MM (Ref # 92210A)	92210-1517	1
BOLT-FLANGED,5X10 (Ref # 130)	130BB0510	2
WASHER-PLAIN,10MM,BLACK (Ref # 411)	411AB1000	2

© 2026 Kawasaki Motors Corp., U.S.A.