# 2010 KLX®250SF

## PARTS DIAGRAM

### Crankshaft

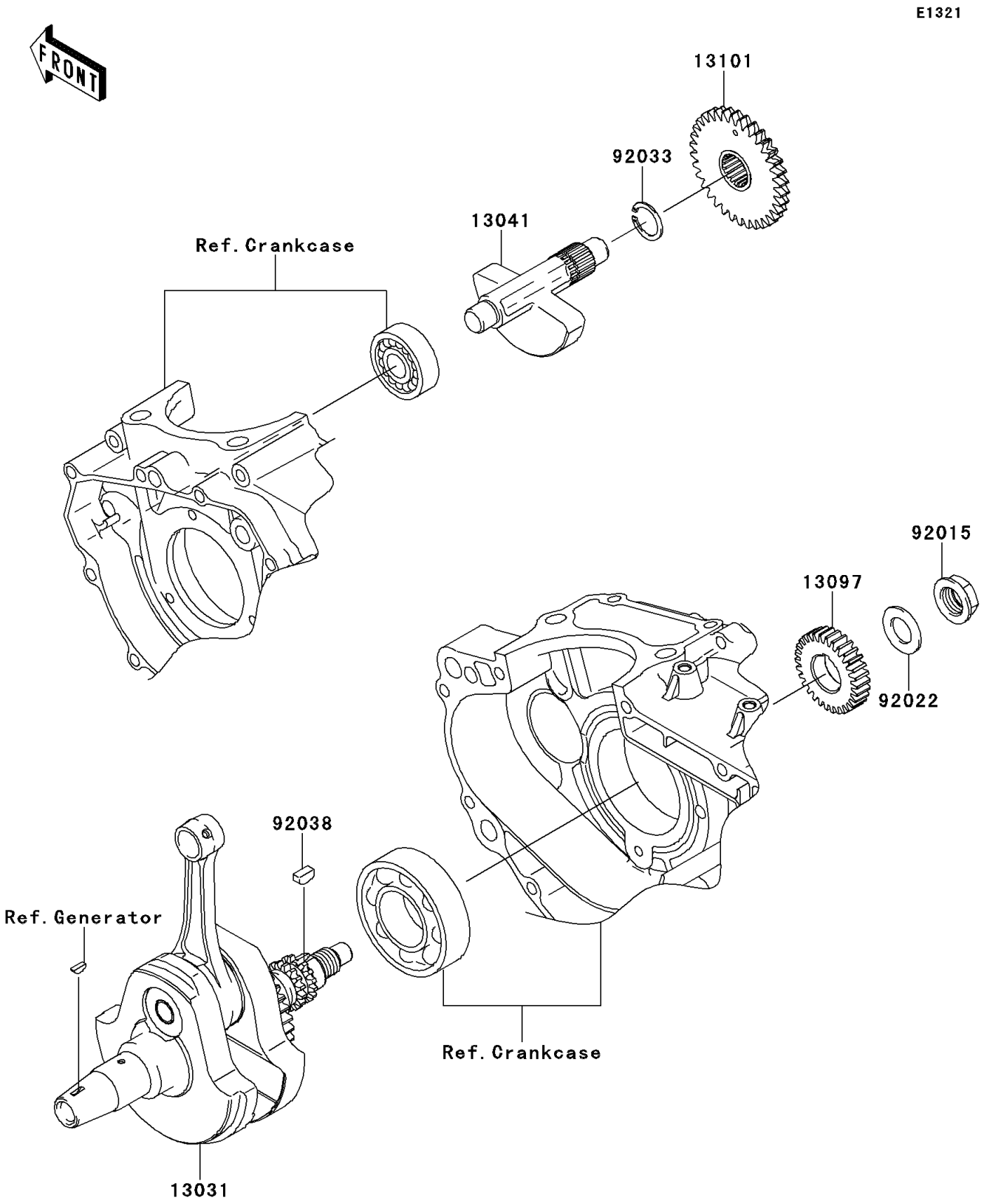


© 2026 Kawasaki Motors Corp., U.S.A.

# 2010 KLX®250SF

## PARTS LIST

### Crankshaft

| ITEM NAME | PART NUMBER | QUANTITY |
|---|---|---|

© 2026 Kawasaki Motors Corp., U.S.A.