1998 Ninja® ZX™-11

PARTS DIAGRAM

Front Wheel

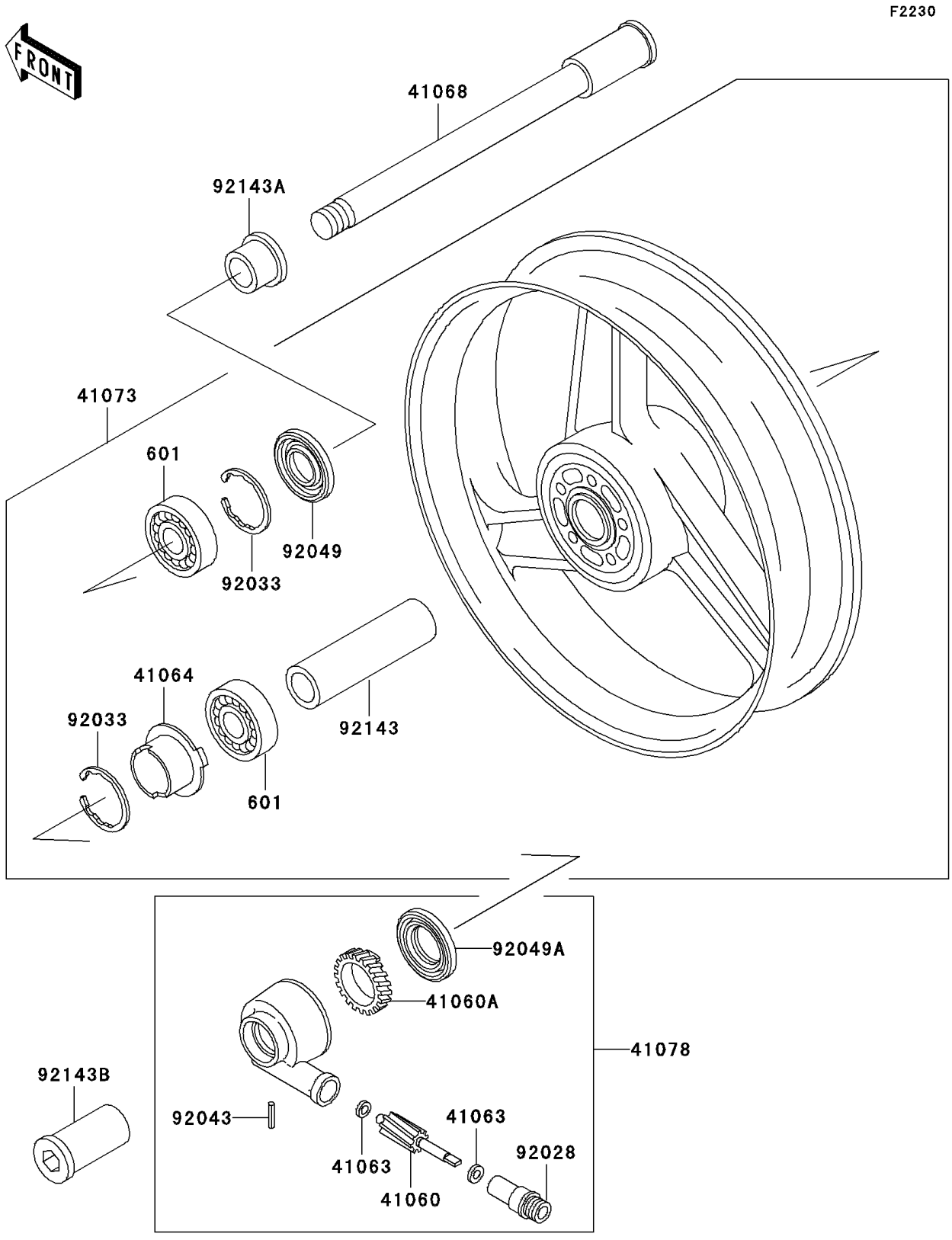

© 2026 Kawasaki Motors Corp., U.S.A.

1998 Ninja® ZX™-11

PARTS LIST

Front Wheel

ITEM NAME	PART NUMBER	QUANTITY

© 2026 Kawasaki Motors Corp., U.S.A.