2010 KLX®250SF

PARTS DIAGRAM

Cylinder Head Cover

Kawasaki
Let the Good Times Roll®

E1112

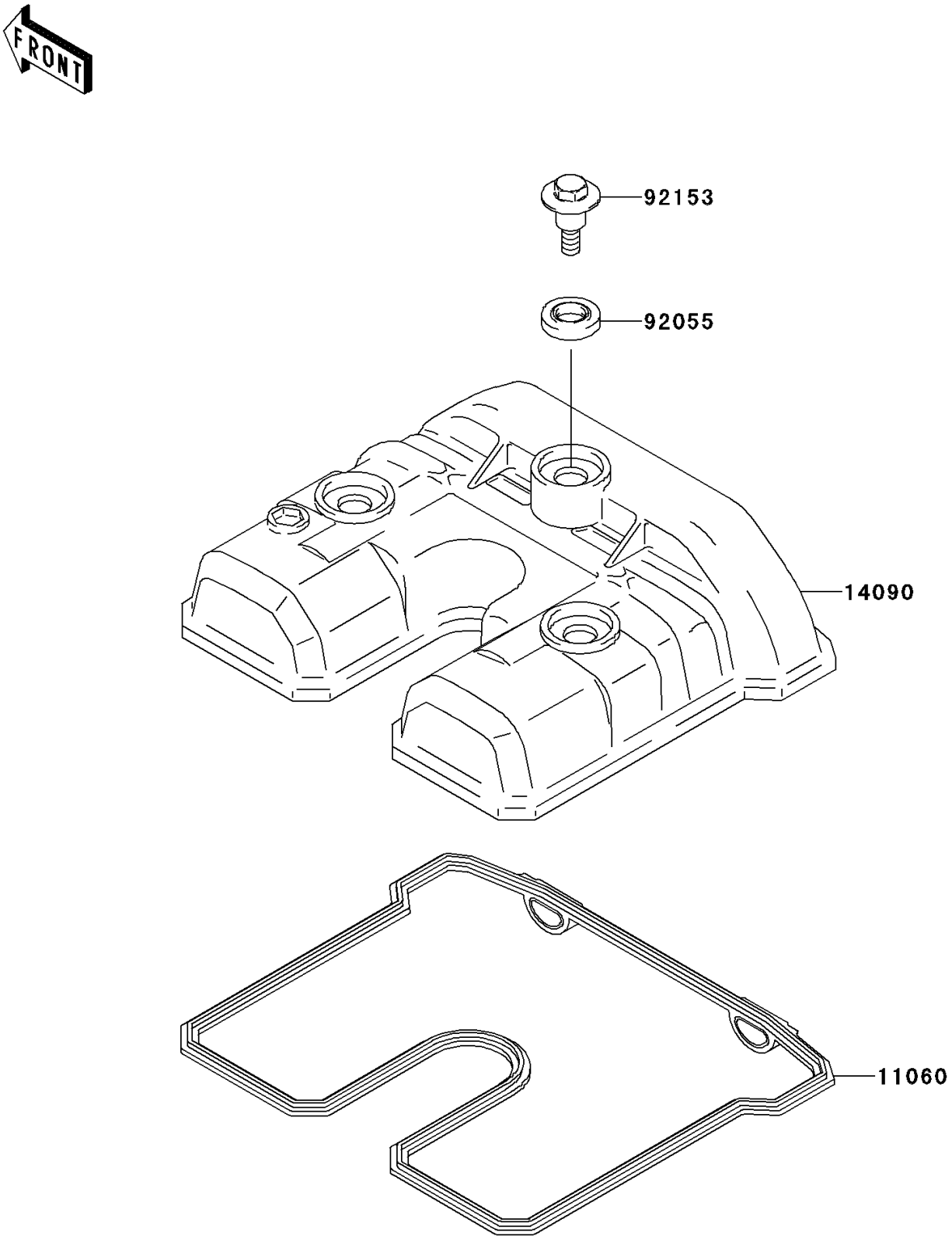

© 2026 Kawasaki Motors Corp., U.S.A.

2010 KLX®250SF

PARTS LIST

Cylinder Head Cover

ITEM NAME	PART NUMBER	QUANTITY
GASKET,HEAD COVER (Ref # 11060)	11060-1318	1
COVER,HEAD (Ref # 14090)	14090-1477	1
RING-O,HEAD COVER BOLT (Ref # 92055)	92055-1352	3
BOLT,FLANGED,6X22.5 (Ref # 92153)	92153-1343	3

© 2026 Kawasaki Motors Corp., U.S.A.