1998 Ninja® ZX™-11

PARTS DIAGRAM

Cylinder Head

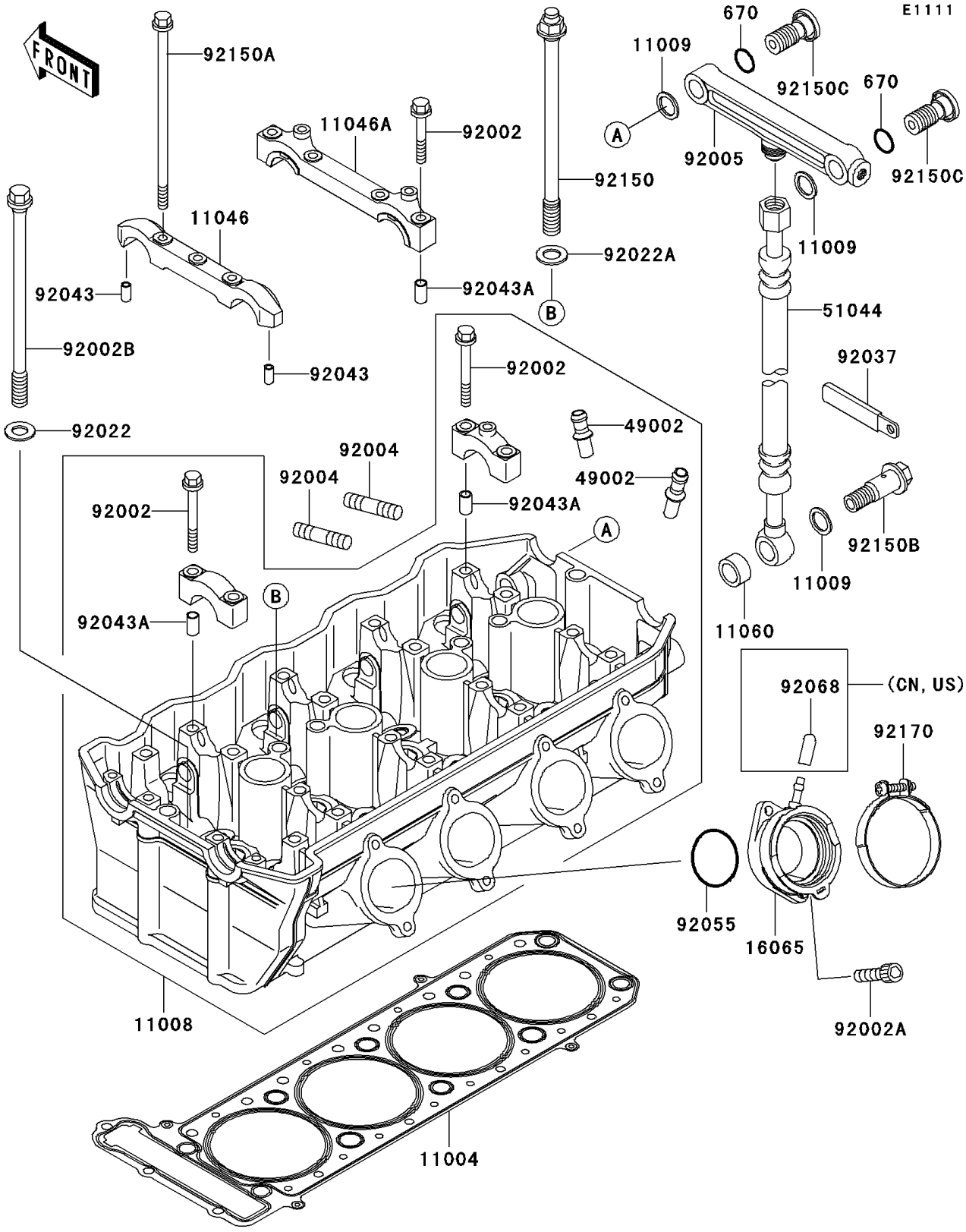

© 2026 Kawasaki Motors Corp., U.S.A.

1998 Ninja® ZX™-11

PARTS LIST

Cylinder Head

ITEM NAME	PART NUMBER	QUANTITY
O RING,15MM (Ref # 670)	670B2015	2
GASKET-HEAD (Ref # 11004)	11004-1248	1
HEAD-COMP-CYLINDER (Ref # 11008)	11008-1281	1
GASKET,14X19.5X1.4 (Ref # 11009)	11009-1461	3
BRACKET,CAMSHAFT,#9 (Ref # 11046)	11046-1150	1
BRACKET,CAMSHAFT,#10 (Ref # 11046A)	11046-1151	1
GASKET (Ref # 11060)	11060-1369	1
HOLDER-CARBURETOR (Ref # 16065)	16065-1210	4
GUIDE-VALVE (Ref # 49002)	49002-1097	AR
TUBE-ASSY (Ref # 51044)	51044-1094	1
BOLT,6X40 (Ref # 92002)	92002-1756	18
BOLT,SOCKET,6X16 (Ref # 92002A)	92002-1778	8
BOLT,10X164 (Ref # 92002B)	92002-1943	4
STUD,8X22 (Ref # 92004)	92004-1181	8
FITTING (Ref # 92005)	92005-1168	1
WASHER,10.5X20X1.6 (Ref # 92022)	92022-1591	4
WASHER,11.5X20.5X1.6 (Ref # 92022A)	92022-1720	6
CLAMP (Ref # 92037)	92037-1997	1
PIN,4.2X6X12 (Ref # 92043)	92043-1262	2
PIN,6.2X8X14 (Ref # 92043A)	92043-1263	18
RING-O,43.7X1.9 (Ref # 92055)	92055-1401	4
BOLT,11X164 (Ref # 92150)	92150-1075	6
BOLT,6X148 (Ref # 92150A)	92150-1076	2
BOLT,BANJO,12X40.5 (Ref # 92150B)	92150-1077	1
BOLT (Ref # 92150C)	92150-1078	2
CLAMP (Ref # 92170)	92170-1160	4
PLUG,12X25 (Ref # 92068)	92068-006	2

© 2026 Kawasaki Motors Corp., U.S.A.