2022 BRUTE FORCE® 300

PARTS DIAGRAM

Meter(s)

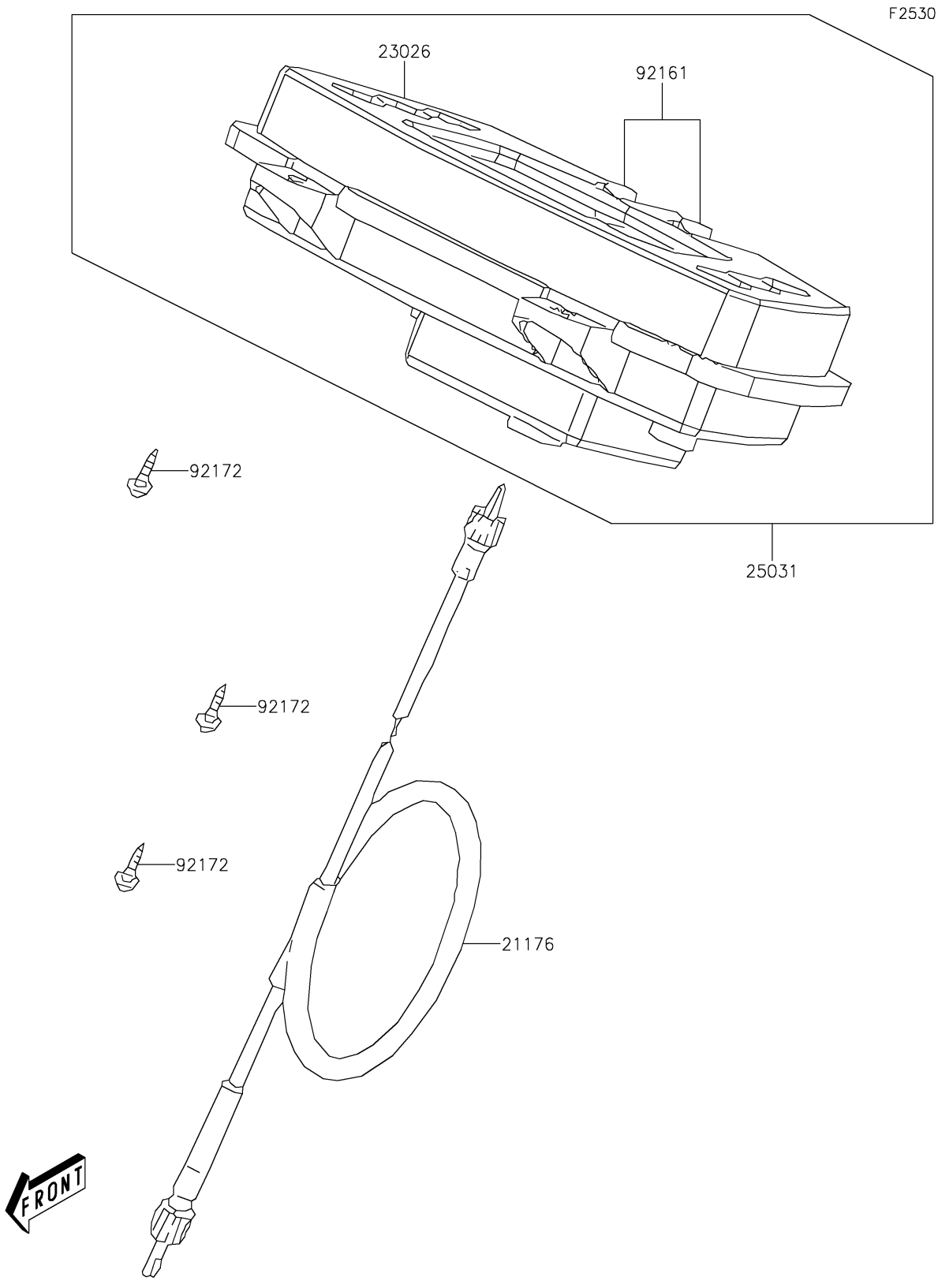

© 2026 Kawasaki Motors Corp., U.S.A.

2022 BRUTE FORCE® 300

PARTS LIST

Meter(s)

ITEM NAME	PART NUMBER	QUANTITY
CABLE,SPEEDOMETER (Ref # 21176)	21176-Y001	1
LENS (Ref # 23026)	23026-Y008	1
METER-ASSY (Ref # 25031)	25031-Y001	1
DAMPER (Ref # 92161)	92161-Y010	2
SCREW,TAPPING,5X12 (Ref # 92172)	92172-Y038	3

© 2026 Kawasaki Motors Corp., U.S.A.