1995 Ninja® ZX™-11

PARTS DIAGRAM

Side Covers/Chain Cover(ZX1100-D3)

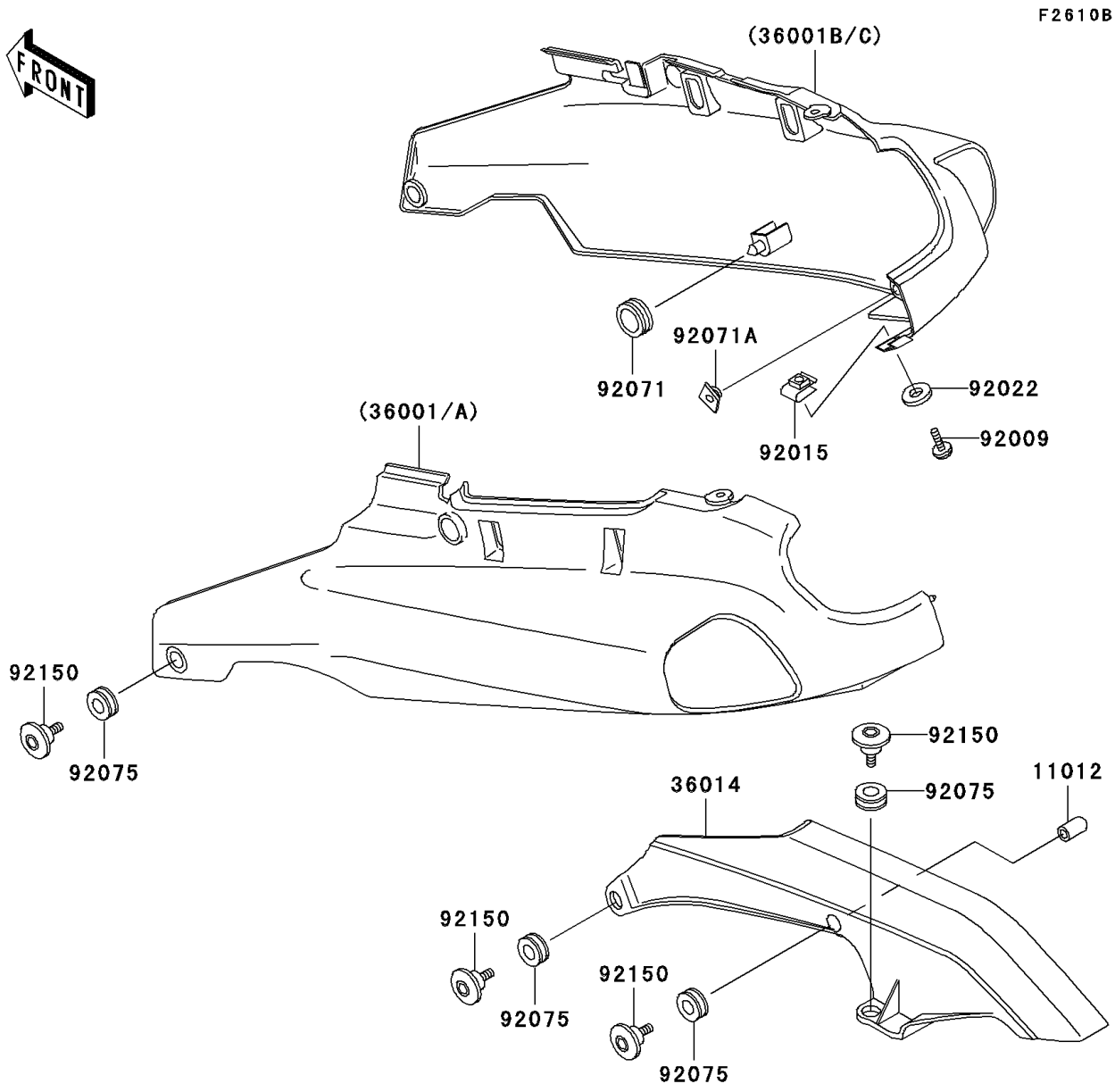

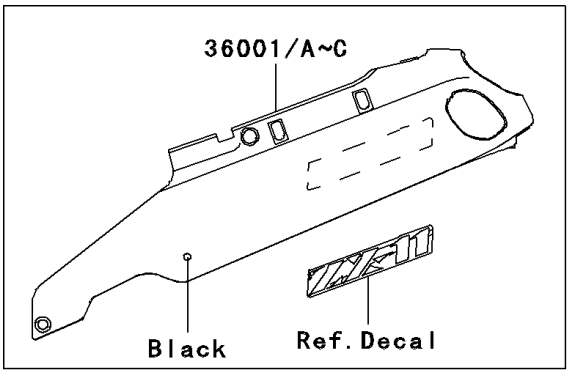

© 2026 Kawasaki Motors Corp., U.S.A.

1995 Ninja® ZX™-11

PARTS LIST

Side Covers/Chain Cover(ZX1100-D3)

ITEM NAME	PART NUMBER	QUANTITY
CAP (Ref # 11012)	11012-1438	1
CASE-CHAIN (Ref # 36014)	36014-1197	1
SCREW,5X16 (Ref # 92009)	92009-1654	1
NUT,5MM (Ref # 92015)	92015-1798	1
WASHER,NYLON,5.3X11.5X1.5 (Ref # 92022)	92022-1521	1
GROMMET (Ref # 92071)	92071-1131	2
GROMMET (Ref # 92071A)	92071-1214	1
DAMPER (Ref # 92075)	92075-1634	5
BOLT,SOCKET,6MM (Ref # 92150)	92150-1154	5
COVER-SIDE,LH,P.P.BLACK MICA (Ref # 36001)	36001-1501-20	1
COVER-SIDE,LH,P.P.BLACK MICA (Ref # 36001A)	36001-1501-5M	1
COVER-SIDE,RH,P.P.BLACK MICA (Ref # 36001B)	36001-1502-20	1
COVER-SIDE,RH,P.P.BLACK MICA (Ref # 36001C)	36001-1502-5M	1

© 2026 Kawasaki Motors Corp., U.S.A.