1993 Ninja® ZX™-11

PARTS DIAGRAM

Generator

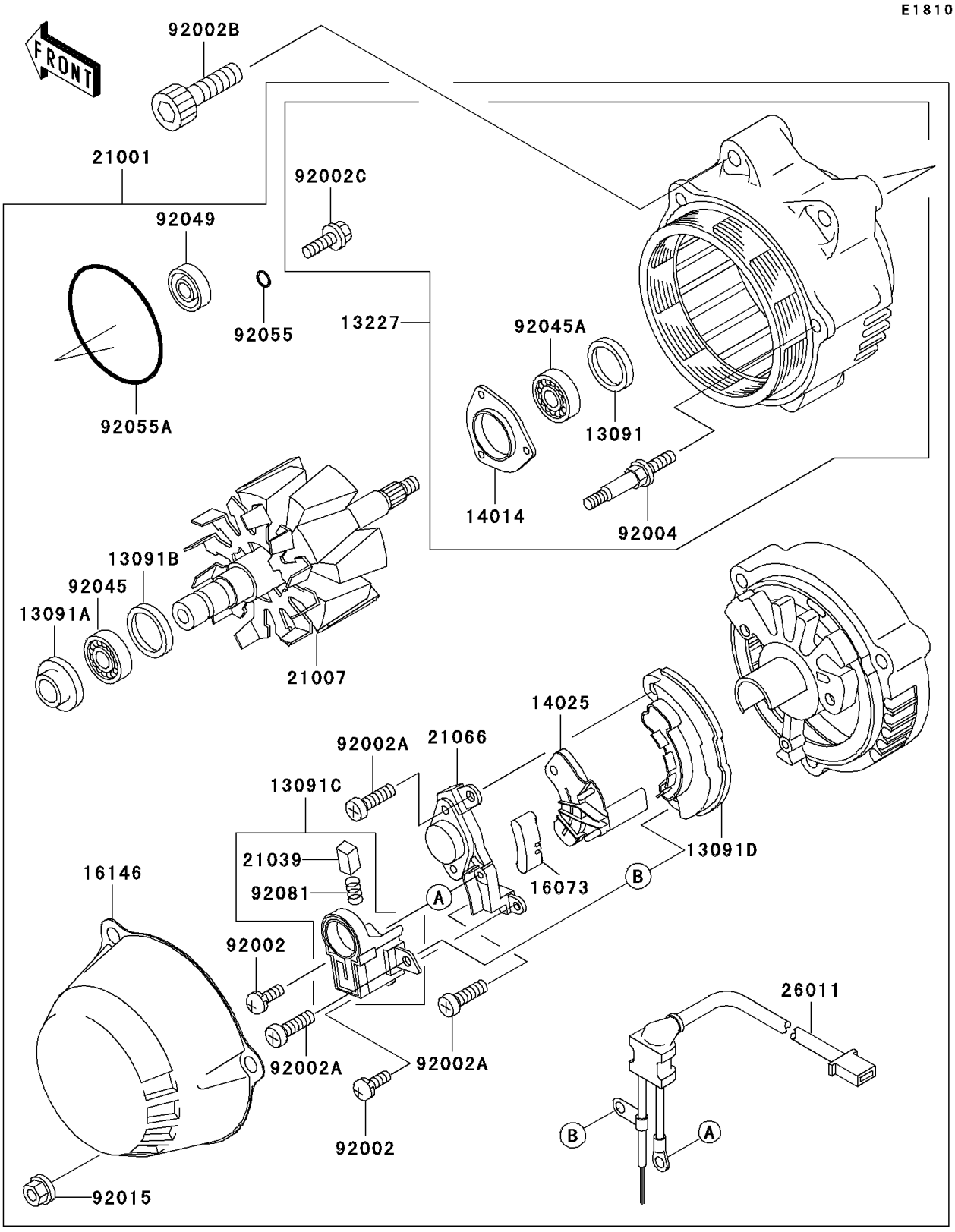

© 2026 Kawasaki Motors Corp., U.S.A.

1993 Ninja® ZX™-11

PARTS LIST

Generator

ITEM NAME	PART NUMBER	QUANTITY
HOLDER,BEARING (Ref # 13091)	13091-1326	1
HOLDER,COVER (Ref # 13091A)	13091-1327	1
HOLDER,BEARING (Ref # 13091B)	13091-1328	1
HOLDER,BRUSH (Ref # 13091C)	13091-1465	1
RECTIFIER (Ref # 13091D)	13091-1466	1
HOUSING,GENERATOR (Ref # 13227)	13227-1079	1
PLATE-POSITION (Ref # 14014)	14014-1065	1
COVER,RECTIFIER (Ref # 14025)	14025-1942	1
INSULATOR (Ref # 16073)	16073-1062	1
COVER-ASSY,GENERATOR (Ref # 16146)	16146-1074	1
GENERATOR (Ref # 21001)	21001-1104	1
ROTOR,GENERATOR (Ref # 21007)	21007-1196	1
BRUSH,CARBON (Ref # 21039)	21039-1052	2
REGULATOR-VOLTAGE (Ref # 21066)	21066-1076	1
WIRE-LEAD,GENERATOR (Ref # 26011)	26011-1432	1
SCREW,4X8 (Ref # 92002)	92002-1379	2
SCREW,5X17.5 (Ref # 92002A)	92002-1380	3
BOLT,SOCKET,8X45 (Ref # 92002B)	92002-1716	3
BOLT (Ref # 92002C)	92002-1856	3
STUD (Ref # 92004)	92004-1196	3
NUT (Ref # 92015)	92015-1800	3
BEARING-BALL,#6002NC (Ref # 92045)	92045-1133	1
BEARING-BALL,#6002 (Ref # 92045A)	92045-1185	1
SEAL-OIL (Ref # 92049)	92049-1200	1
RING-O,3.5MM (Ref # 92055)	92055-1264	3
RING-O,70.6X2.4 (Ref # 92055A)	92055-1366	1
SPRING,BRUSH (Ref # 92081)	92081-1759	2

© 2026 Kawasaki Motors Corp., U.S.A.