1993 Ninja® ZX™-11

PARTS DIAGRAM

Oil Pump/Oil Filter

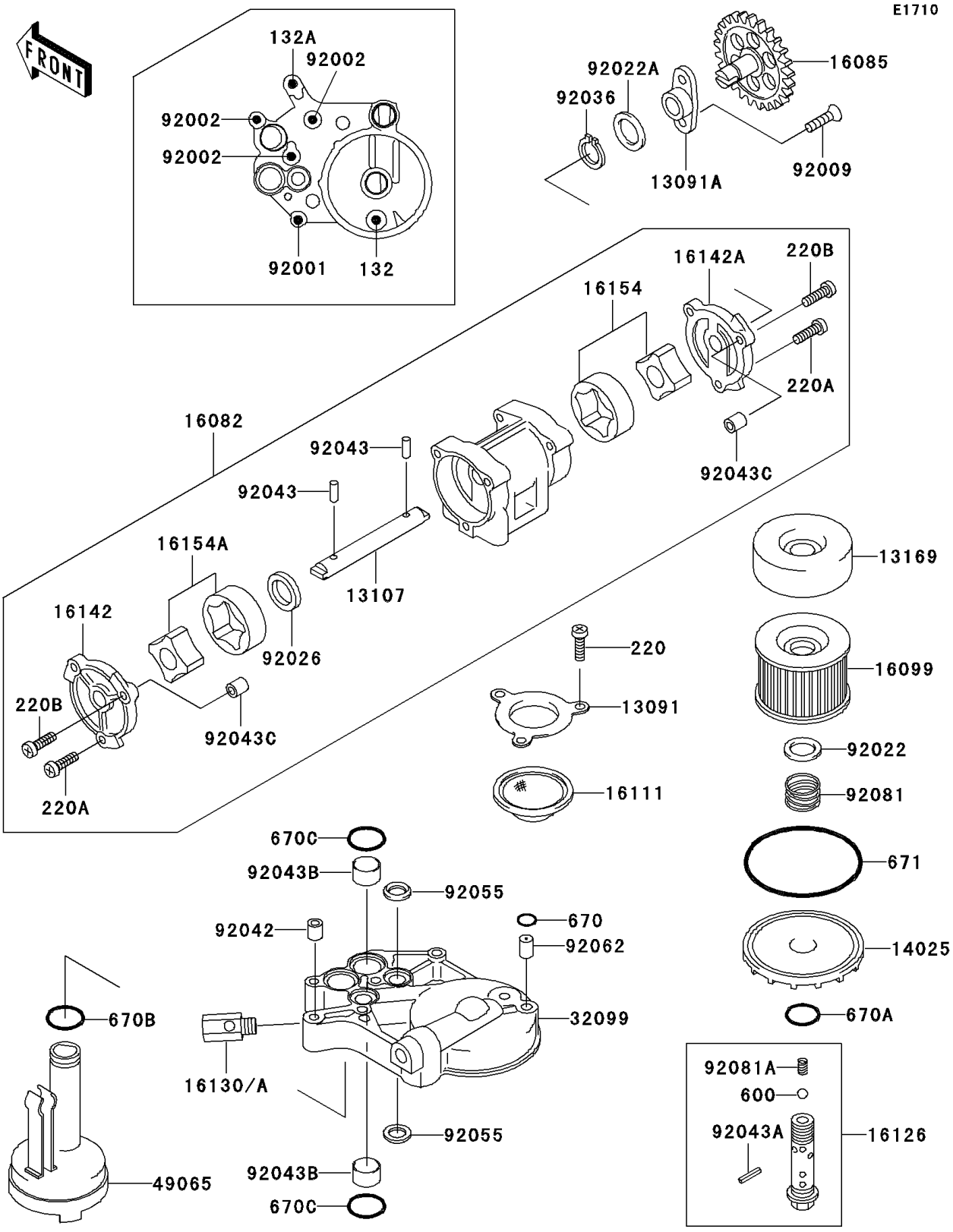

© 2026 Kawasaki Motors Corp., U.S.A.

1993 Ninja® ZX™-11

PARTS LIST

Oil Pump/Oil Filter

ITEM NAME	PART NUMBER	QUANTITY
BOLT-FLANGED-SMALL (Ref # 132)	132G0616	1
BOLT-FLANGED-SMALL (Ref # 132A)	132G0645	1
SCREW-PAN-CROS,6X12 (Ref # 220)	220B0612	3
SCREW-PAN-CROS,6X18 (Ref # 220A)	220B0618	4
SCREW-PAN-CROS,6X25 (Ref # 220B)	220B0625	2
BALL-STEEL,3/8" (Ref # 600)	600A1200	1
HOLDER,OIL FILTER (Ref # 13091)	13091-1274	1
HOLDER,PUMP GEAR (Ref # 13091A)	13091-1333	1
SHAFT,OIL PUMP (Ref # 13107)	13107-1236	1
PLATE,OIL FILTER (Ref # 13169)	13169-1313	1
COVER,OIL FILTER,F.BLACK (Ref # 14025)	14025-1422	1
PUMP-ASSY-OIL (Ref # 16082)	16082-1096	1
GEAR,OIL PUMP,35T (Ref # 16085)	16085-1103	1
ELEMENT-OIL FILTER (Ref # 16099)	16099-003	1
FILTER,OIL (Ref # 16111)	16111-003	1
VALVE,OIL FILTER (Ref # 16126)	16126-1108	1
VALVE-ASSY-RELIEF (Ref # 16130)	16130-1001	1
COVER-PUMP,LH (Ref # 16142)	16142-1088	1
COVER-PUMP,RH (Ref # 16142A)	16142-1089	1
ROTOR-PUMP (Ref # 16154)	16154-1007	1
ROTOR-PUMP (Ref # 16154A)	16154-1078	1
CASE,OIL FILTER (Ref # 32099)	32099-1083	1
FILTER-OIL (Ref # 49065)	49065-1063	1
BOLT,FLANGED,6X38 (Ref # 92001)	92001-1105	1
BOLT,6X38 (Ref # 92002)	92002-1431	3
SCREW,6X16 (Ref # 92009)	92009-1360	2
WASHER,20.5X30X1 (Ref # 92022)	92022-1012	1
WASHER,14X20X1 (Ref # 92022A)	92022-1495	1
SPACER,OIL PUMP (Ref # 92026)	92026-1230	1

© 2026 Kawasaki Motors Corp., U.S.A.

1993 Ninja® ZX™-11

PARTS LIST

Oil Pump/Oil Filter

ITEM NAME	PART NUMBER	QUANTITY
RING-SNAP,PUMP GEAR (Ref # 92036)	92036-1052	1
PIN,DOWEL,6.3X8X14 (Ref # 92042)	92042-007	1
PIN,DOWEL,5X17.8 (Ref # 92043)	92043-1061	2
PIN,SPRING,2X20 (Ref # 92043A)	92043-111	1
PIN,18X20X12 (Ref # 92043B)	92043-1213	3
PIN,DOWEL,8X10 (Ref # 92043C)	92043-1302	2
RING-O,19.5MM (Ref # 92055)	92055-077	3
NOZZLE (Ref # 92062)	92062-1055	1
SPRING,OIL FILTER (Ref # 92081)	92081-1018	1
SPRING (Ref # 92081A)	92081-109	1
O RING,8MM (Ref # 670)	670B1508	1
O RING,16MM (Ref # 670A)	670B2016	1
O RING,18MM (Ref # 670B)	670B2018	1
O RING,20MM (Ref # 670C)	670D2020	3
O RING,90MM (Ref # 671)	671B2590	1

© 2026 Kawasaki Motors Corp., U.S.A.