1993 Ninja® ZX™-11

PARTS DIAGRAM

Cylinder/Piston(s)

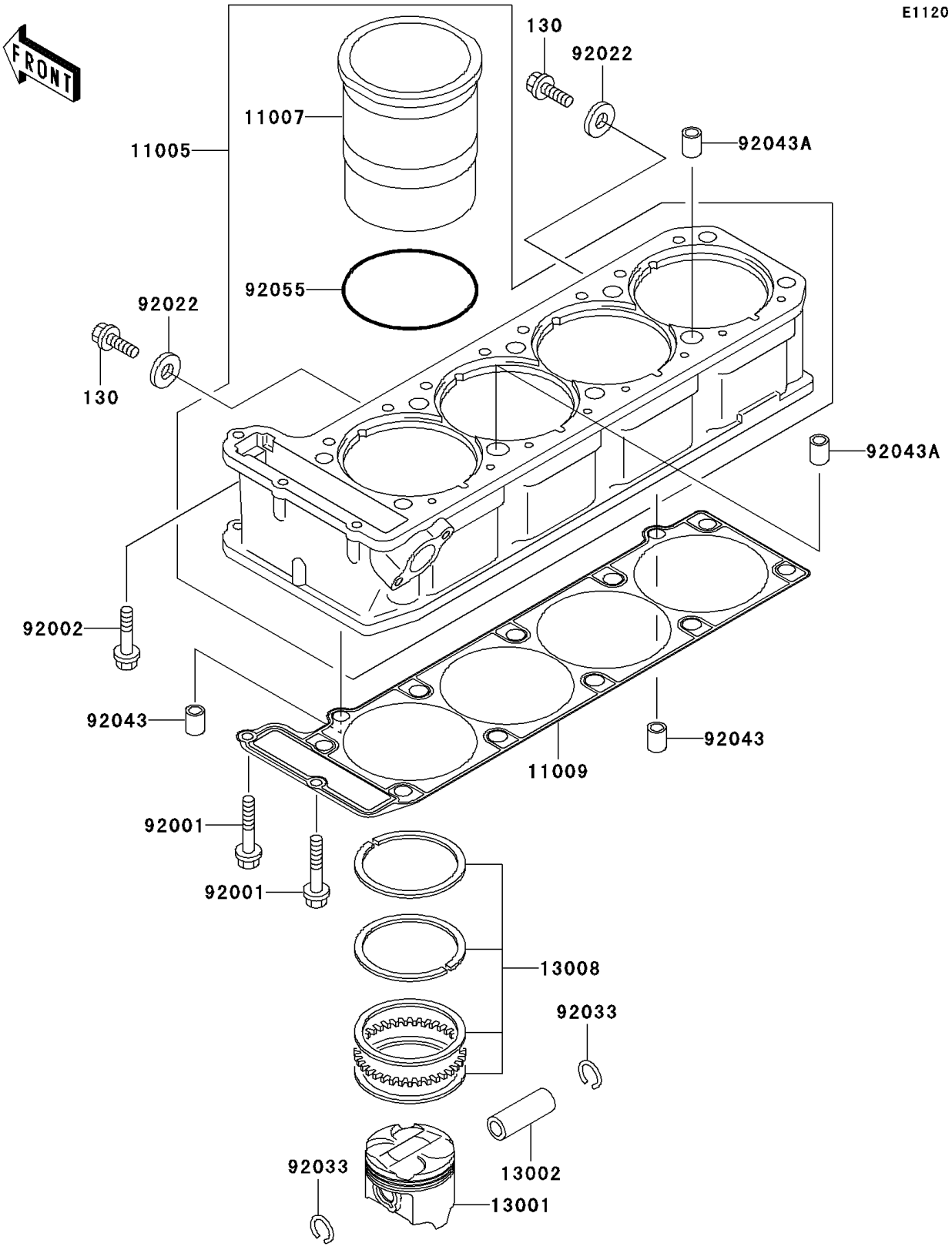

© 2026 Kawasaki Motors Corp., U.S.A.

1993 Ninja® ZX™-11

PARTS LIST

Cylinder/Piston(s)

ITEM NAME	PART NUMBER	QUANTITY
BOLT-FLANGED,6X10,BLACK (Ref # 130)	130C0610	2
CYLINDER-ENGINE (Ref # 11005)	11005-1615	1
LINER-CYLINDER (Ref # 11007)	11007-1114	4
GASKET,CYLINDER BASE (Ref # 11009)	11009-1847	1
PISTON-ENGINE (Ref # 13001)	13001-1397	4
PIN-PISTON (Ref # 13002)	13002-1058	4
RING-SET-PISTON (Ref # 13008)	13008-1152	4
BOLT,6X38 (Ref # 92001)	92001-1899	2
BOLT,6X30 (Ref # 92002)	92002-1138	1
WASHER,6.2X11X1 (Ref # 92022)	92022-304	2
RING-SNAP,20.5X1.2 (Ref # 92033)	92033-1099	8
PIN,8.2X10X14 (Ref # 92043)	92043-1264	2
PIN,11.5X14X14 (Ref # 92043A)	92043-1279	2
RING-O,82.6X2.4 (Ref # 92055)	92055-1465	4

© 2026 Kawasaki Motors Corp., U.S.A.