2022 KX™85

PARTS DIAGRAM

Generator

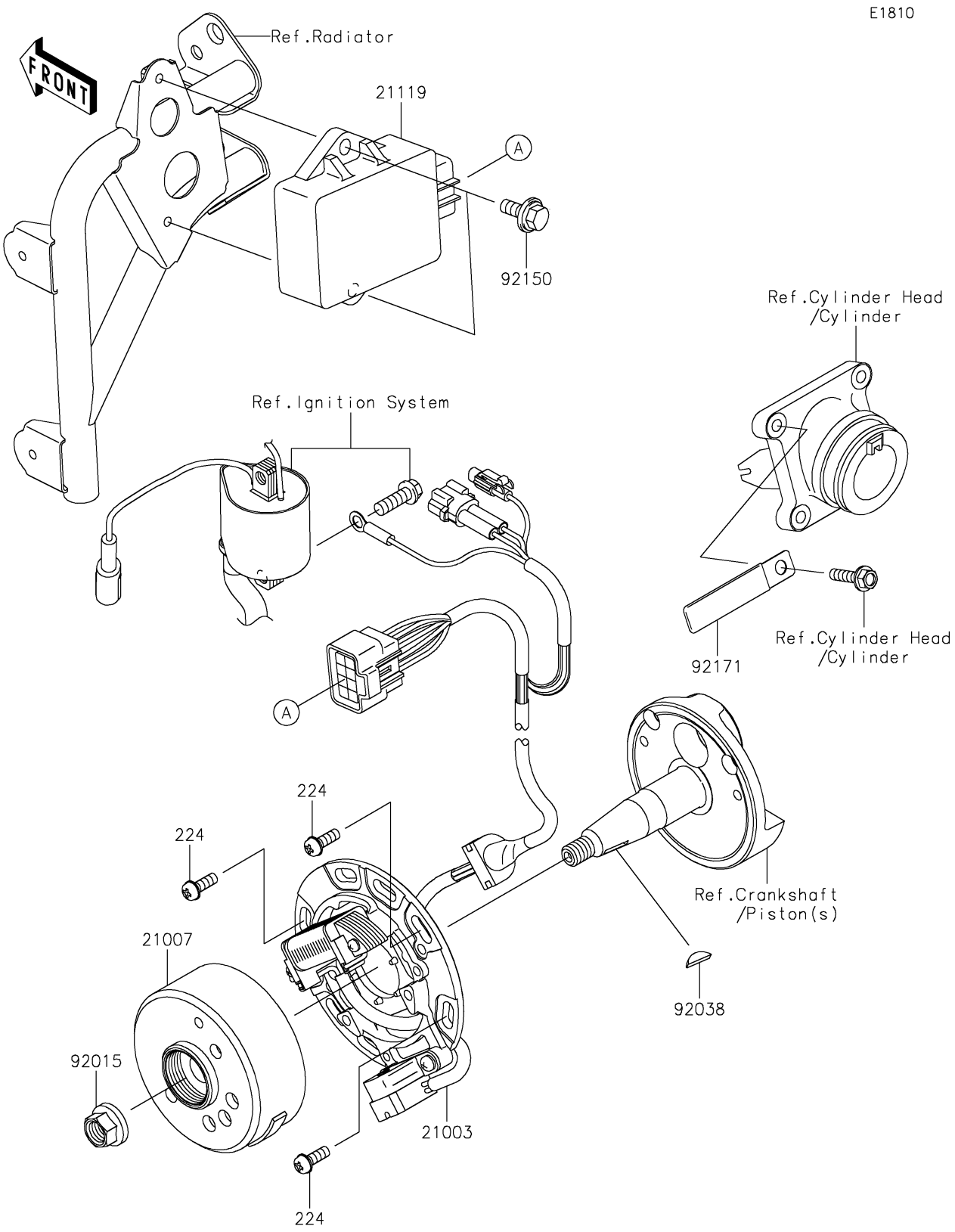

© 2026 Kawasaki Motors Corp., U.S.A.

2022 KX™85

PARTS LIST

Generator

ITEM NAME	PART NUMBER	QUANTITY
STATOR (Ref # 21003)	21003-0219	1
ROTOR,I=4.0 (Ref # 21007)	21007-0073	1
IGNITER (Ref # 21119)	21119-0587	1
NUT,FLANGED,10MM (Ref # 92015)	92015-077	1
KEY,WOODRUFF (Ref # 92038)	92038-001	1
BOLT,FLANGED,6X16 (Ref # 92150)	92150-1506	2
CLAMP,L=60 (Ref # 92171)	92171-0652	1
SCREW-PAN-WP-CROS,6X14 (Ref # 224)	224AA0614	3

© 2026 Kawasaki Motors Corp., U.S.A.