2025 KX™85

PARTS DIAGRAM

Gear Change Drum/Shift Fork(s)

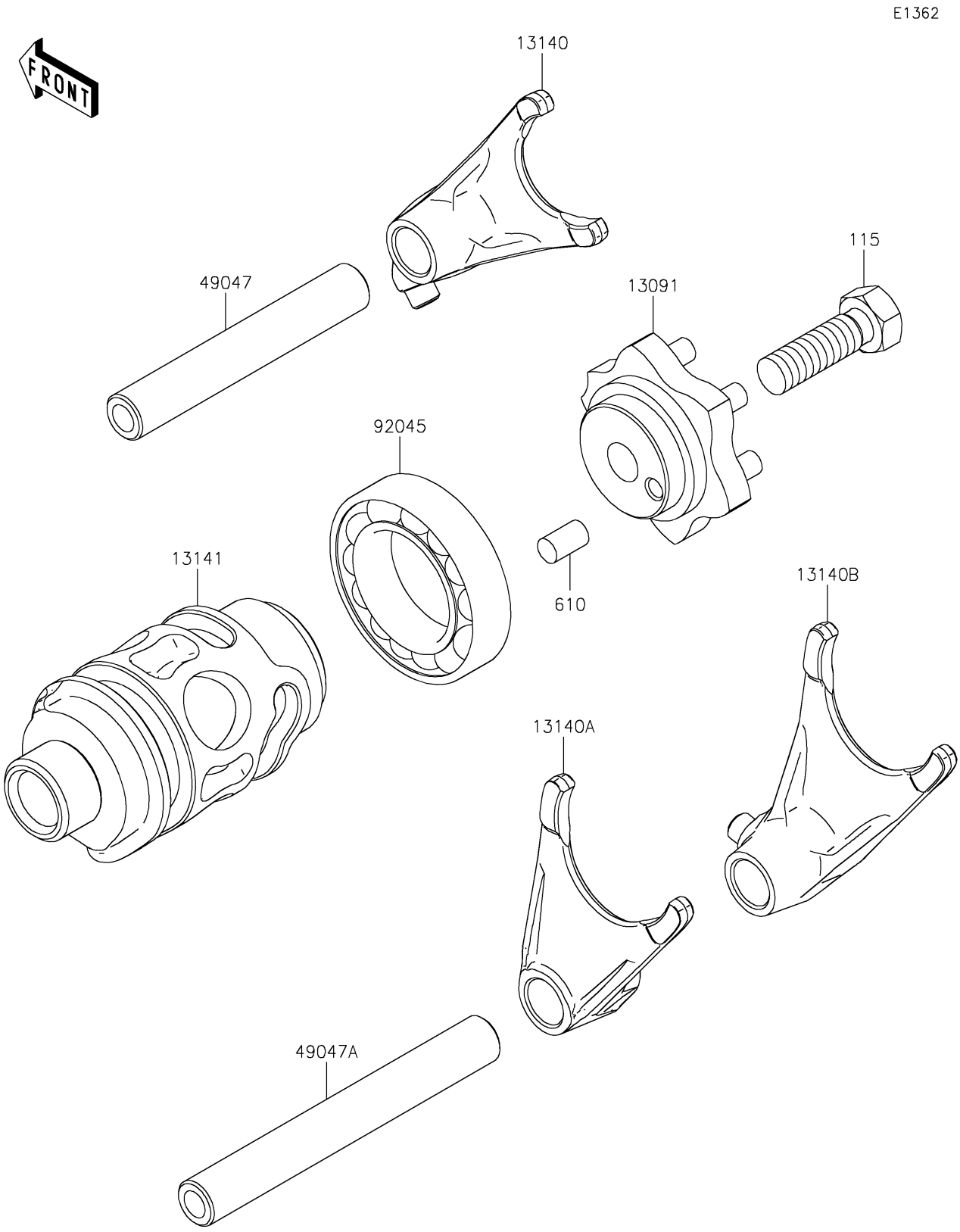

© 2026 Kawasaki Motors Corp., U.S.A.

2025 KX™85

PARTS LIST

Gear Change Drum/Shift Fork(s)

ITEM NAME	PART NUMBER	QUANTITY
HOLDER,CHANGE DRUM (Ref # 13091)	13091-1390	1
FORK-SHIFT,5TH&6TH (Ref # 13140)	13140-1302	1
FORK-SHIFT,2ND&3RD (Ref # 13140A)	13140-1303	1
FORK-SHIFT,LOW&4TH (Ref # 13140B)	13140-1304	1
DRUM-CHANGE (Ref # 13141)	13141-1120	1
ROD-SHIFT,5.9X10X64.5 (Ref # 49047)	49047-1063	1
ROD-SHIFT,5.9X10X81 (Ref # 49047A)	49047-1064	1
BEARING-BALL,6905Z (Ref # 92045)	92045-1058	1
BOLT-SMALL-UPSET,8X25 (Ref # 115)	115BA0825	1
ROLLER,4X8 (Ref # 610)	610A0408	1

© 2026 Kawasaki Motors Corp., U.S.A.