2025 KX112

PARTS DIAGRAM

Brake Pedal

F2260

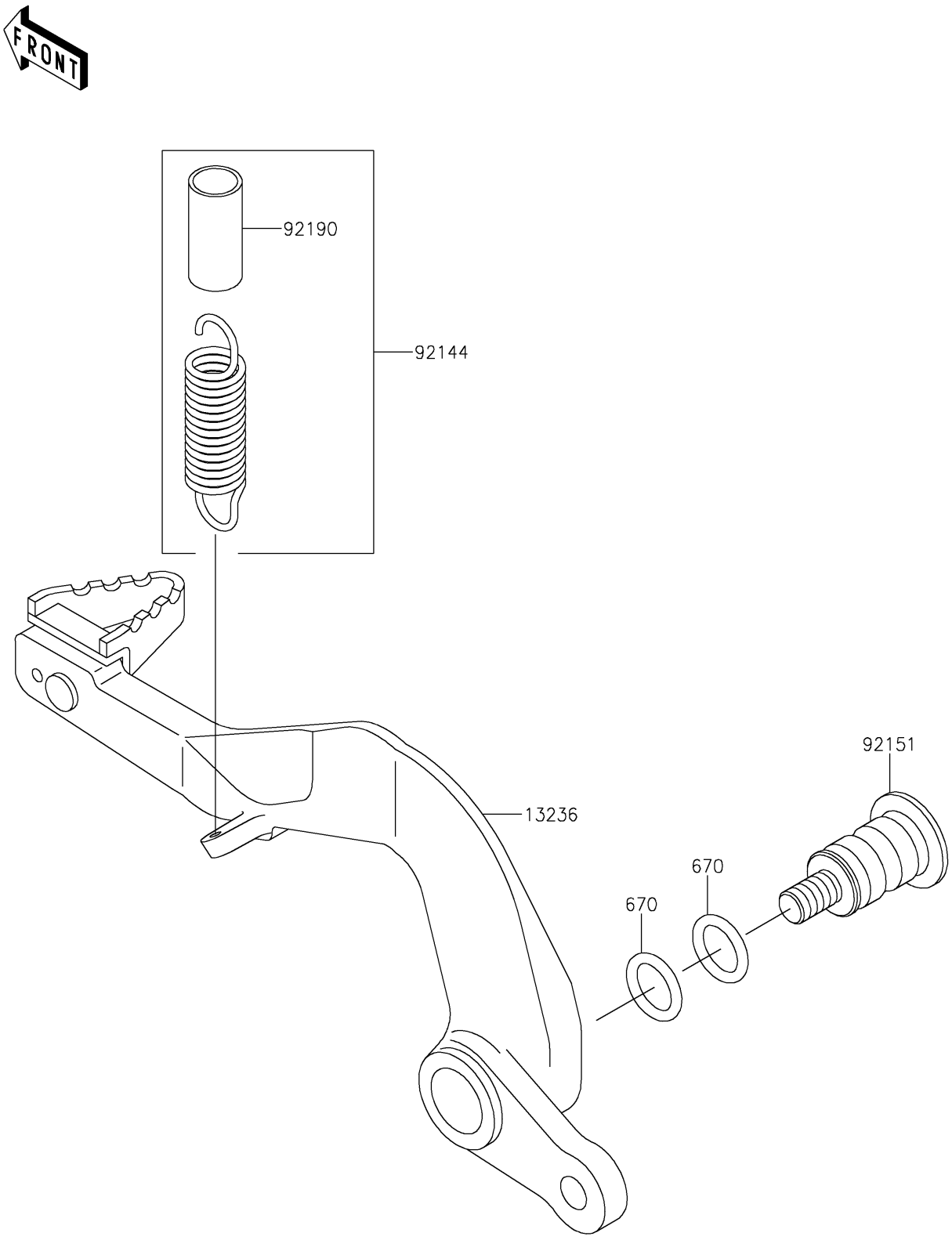

© 2026 Kawasaki Motors Corp., U.S.A.

2025 KX112

PARTS LIST

Brake Pedal

ITEM NAME	PART NUMBER	QUANTITY
LEVER-COMP,BRAKE PEDAL,ALUM. (Ref # 13236)	13236-1353	1
SPRING,BRAKE PEDAL RETURN (Ref # 92144)	92144-1752	1
BOLT,BRAKE PEDAL,8MM (Ref # 92151)	92151-1572	1
TUBE,13X16X25 (Ref # 92190)	92190-1488	1
O RING,12MM (Ref # 670)	670B2012	2

© 2026 Kawasaki Motors Corp., U.S.A.