2017 MULE PRO-DX™ EPS LE DIESEL

PARTS DIAGRAM

Accessory

F2910

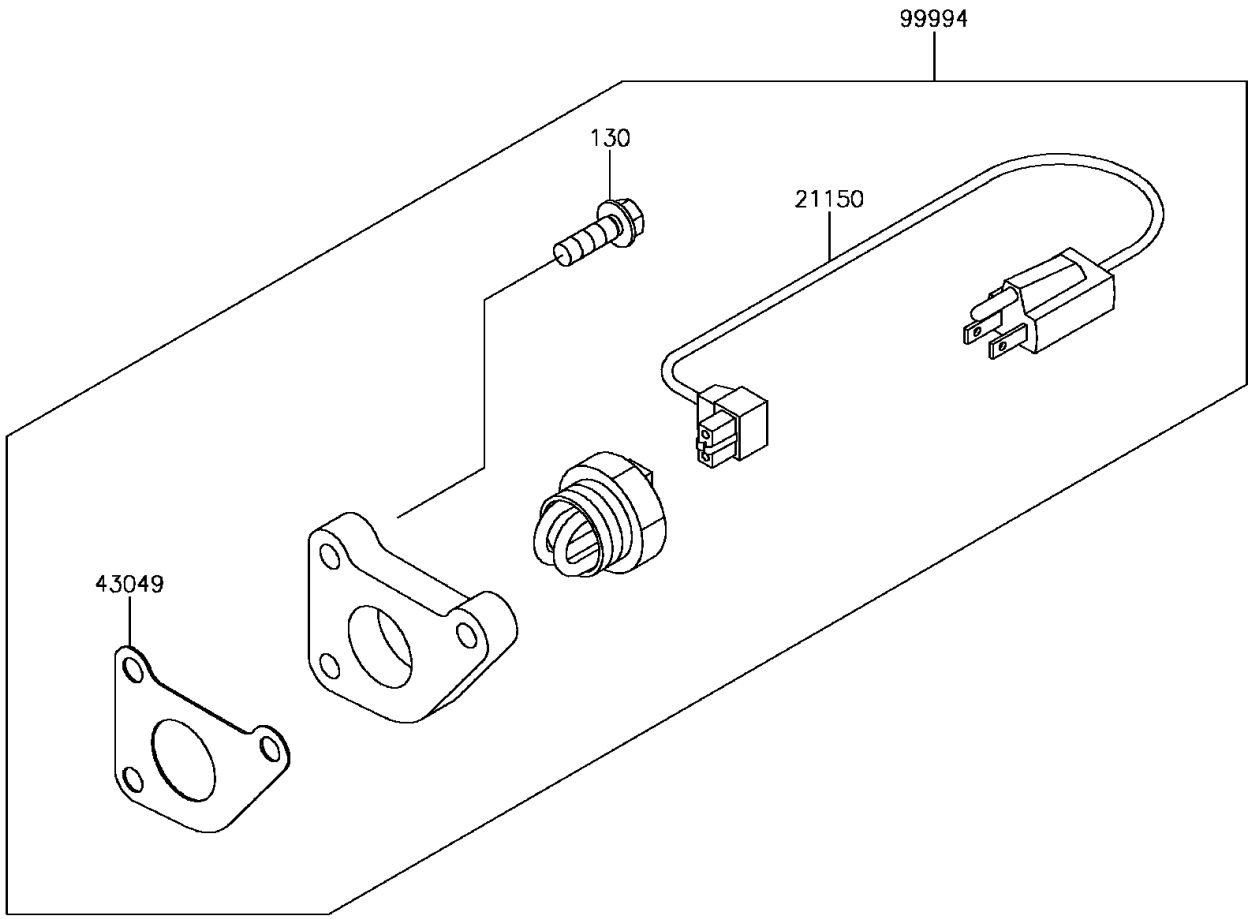

© 2026 Kawasaki Motors Corp., U.S.A.

2017 MULE PRO-DX™ EPS LE DIESEL

PARTS LIST

Accessory

ITEM NAME	PART NUMBER	QUANTITY
BOLT-FLANGED,8X25 (Ref # 130)	130BA0825	3
CORD-ASSY (Ref # 21150)	21150-0015	1
PACKING (Ref # 43049)	43049-0034	1
KIT-ACCESSORY,BLOCK HEATER (Ref # 99994)	99994-0741	1

© 2026 Kawasaki Motors Corp., U.S.A.