2009 KX™450F

PARTS DIAGRAM

Engine Shrouds

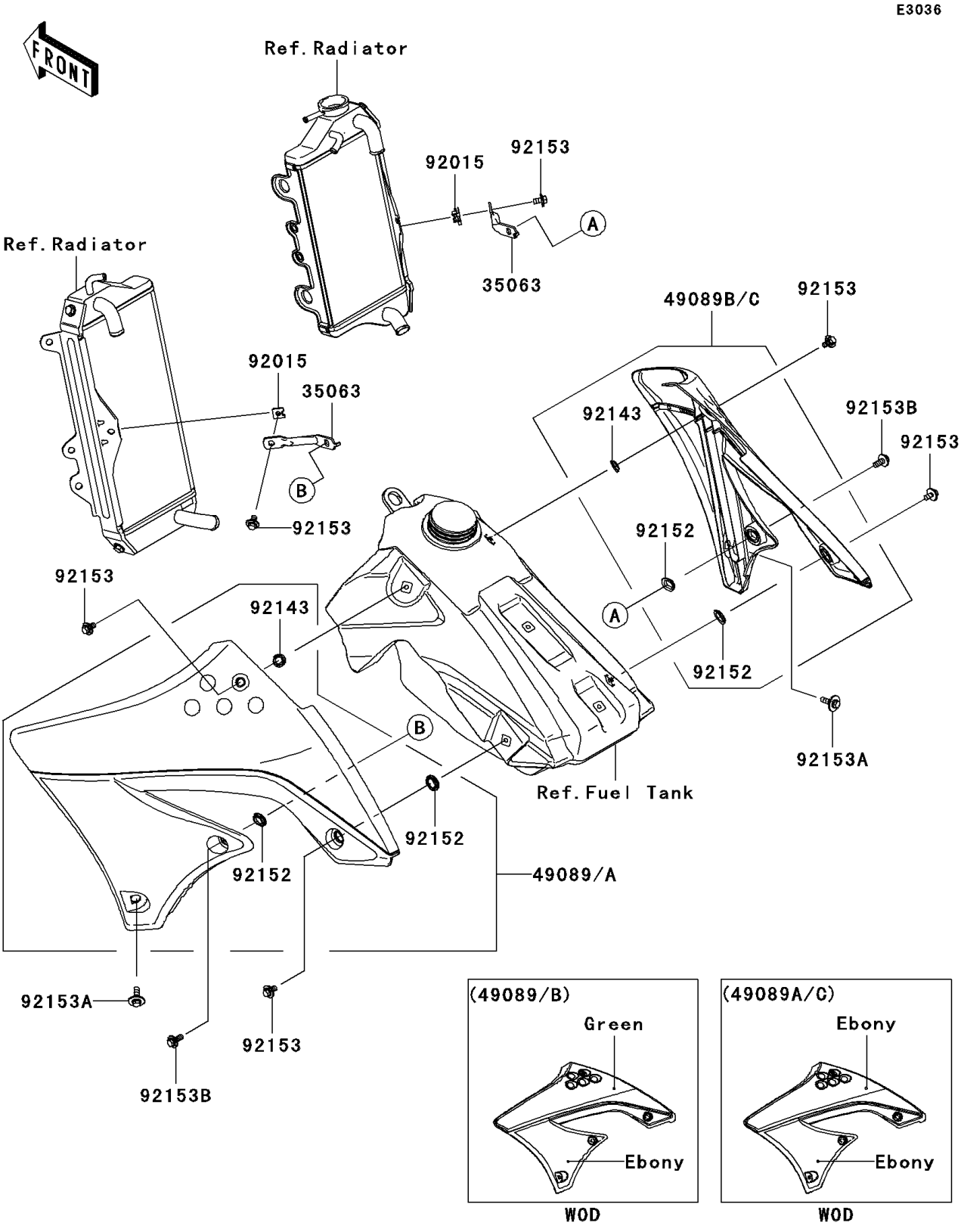

© 2026 Kawasaki Motors Corp., U.S.A.

2009 KX™450F

PARTS LIST

Engine Shrouds

ITEM NAME	PART NUMBER	QUANTITY
STAY,RADIATOR (Ref # 35063)	35063-0644	2
SHROUD-ENGINE,LH,UP EBO+LO EBO (Ref # 49089A)	49089-0066-27H	1
SHROUD-ENGINE,RH,UP EBO+LO EBO (Ref # 49089C)	49089-0067-27H	1
NUT (Ref # 92015)	92015-1487	2
COLLAR (Ref # 92143)	92143-1196	2
COLLAR (Ref # 92152)	92152-0052	4
BOLT,6X12 (Ref # 92153)	92153-0503	6
BOLT,6X20 (Ref # 92153A)	92153-0864	2
BOLT,FLANGED,6X16 (Ref # 92153B)	92153-1059	2

© 2026 Kawasaki Motors Corp., U.S.A.