2022 Ninja® ZX™-10R ABS

PARTS DIAGRAM

Headlight(s)

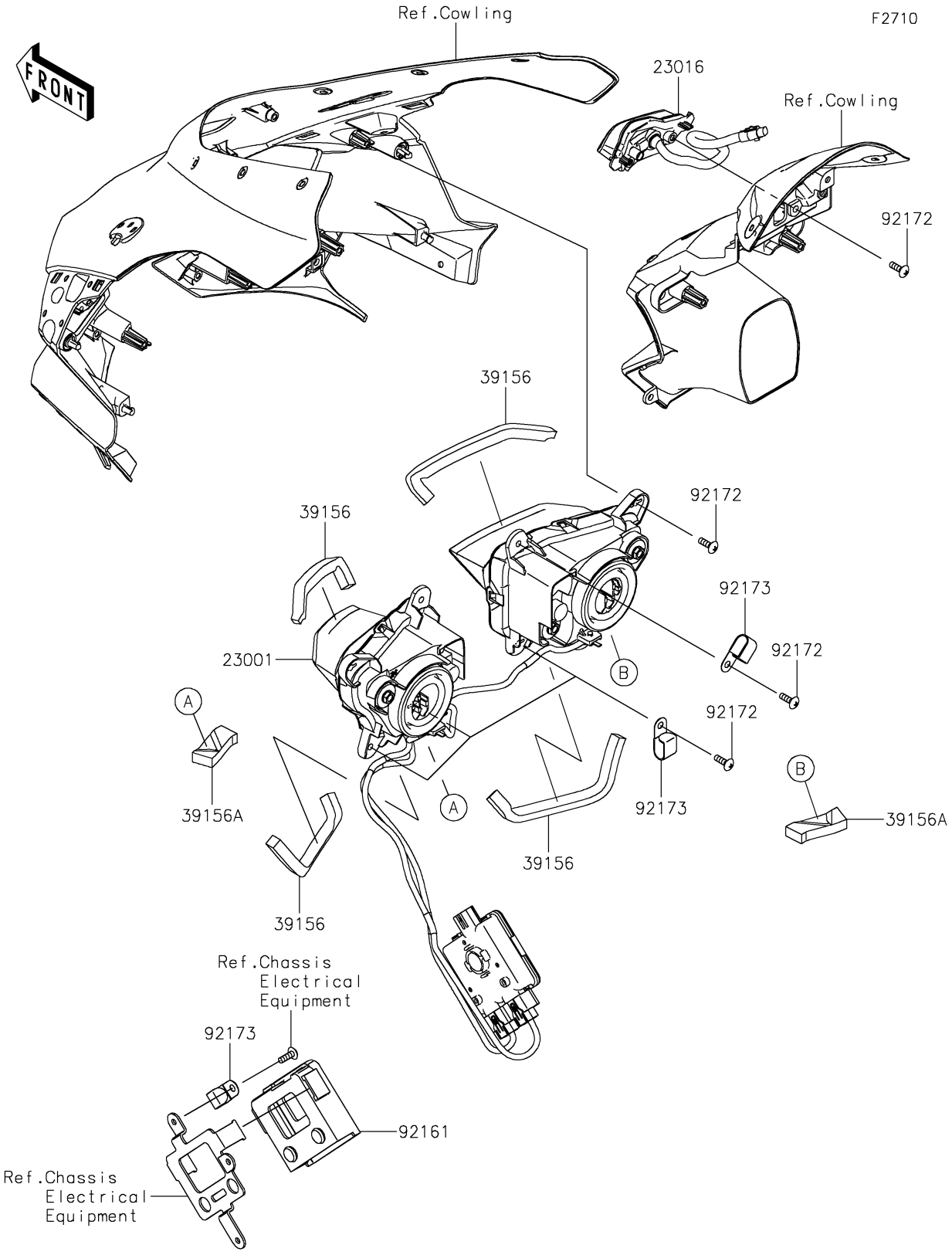

© 2026 Kawasaki Motors Corp., U.S.A.

2022 Ninja® ZX™-10R ABS

PARTS LIST

Headlight(s)

ITEM NAME	PART NUMBER	QUANTITY

© 2026 Kawasaki Motors Corp., U.S.A.