2024 Ninja ZX-10R ABS

PARTS DIAGRAM

Stand(s)

F2190

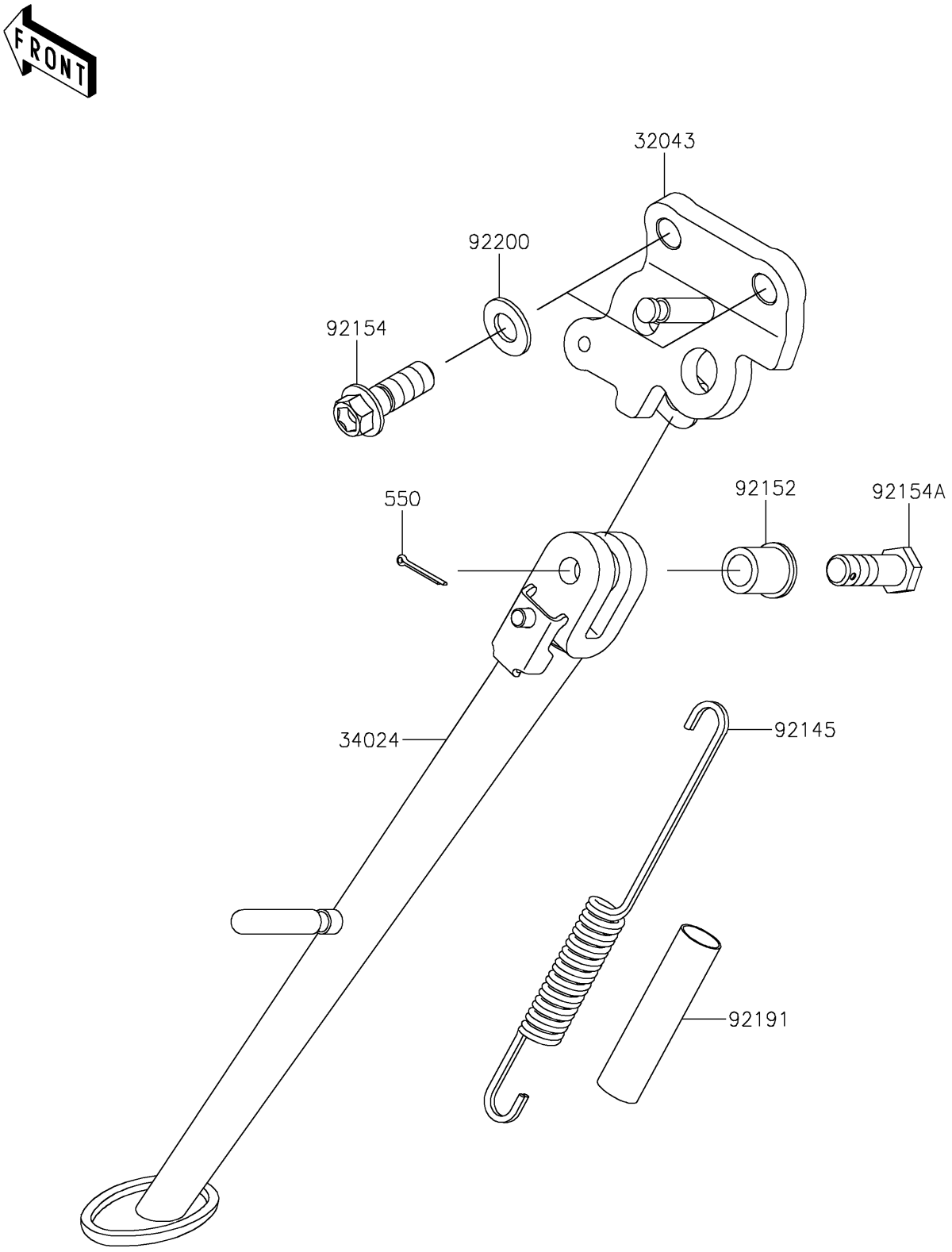

© 2026 Kawasaki Motors Corp., U.S.A.

2024 Ninja ZX-10R ABS

PARTS LIST

Stand(s)

ITEM NAME	PART NUMBER	QUANTITY
BRACKET-STAND,F.S.BLACK (Ref # 32043)	32043-0652-18R	1
STAND-SIDE,F.S.BLACK (Ref # 34024)	34024-0137-18R	1
SPRING,SIDE STAND (Ref # 92145)	92145-1731	1
COLLAR,10.2X15X18.1 (Ref # 92152)	92152-2171	1
BOLT,FLANGED,10X28 (Ref # 92154)	92154-1963	2
BOLT,10X30 (Ref # 92154A)	92154-2088	1
TUBE,13X16X60 (Ref # 92191)	92191-1001	1
WASHER,10.2X20X1.6 (Ref # 92200)	92200-0328	2
PIN-COTTER,2.0X15 (Ref # 550)	550AA2015	1

© 2026 Kawasaki Motors Corp., U.S.A.