2024 Ninja ZX-10R ABS

PARTS DIAGRAM

Engine Mount

F2122

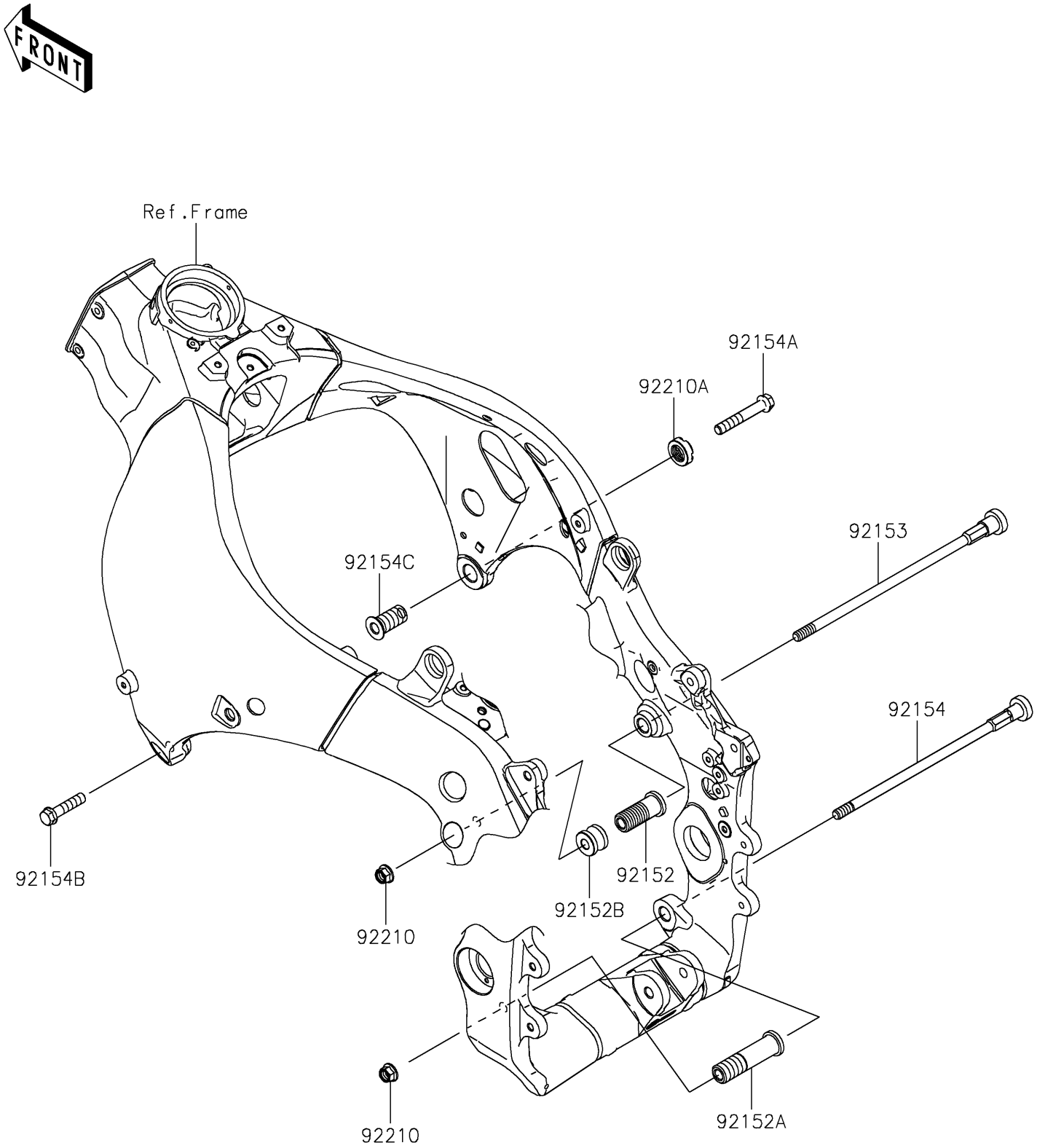

© 2026 Kawasaki Motors Corp., U.S.A.

2024 Ninja ZX-10R ABS

PARTS LIST

Engine Mount

ITEM NAME	PART NUMBER	QUANTITY
COLLAR,ENGINE MOUNT (Ref # 92152)	92152-0076	1
COLLAR,10.5X20X80 (Ref # 92152A)	92152-0860	1
COLLAR (Ref # 92152B)	92152-0984	1
BOLT,SOCKET,10X279 (Ref # 92153)	92153-1329	1
BOLT,SOCKET,10X260 (Ref # 92154)	92154-0386	1
BOLT,FLANGED,10X65 (Ref # 92154A)	92154-1964	1
BOLT,FLANGED,10X40 (Ref # 92154B)	92154-1965	1
BOLT,SOCKET,18X38 (Ref # 92154C)	92154-1966	1
NUT,LOCK,FLANGED,10MM (Ref # 92210)	92210-1139	2
NUT,CASTLE,18MM (Ref # 92210A)	92210-1390	1

© 2026 Kawasaki Motors Corp., U.S.A.