2024 NINJA® ZX™-10R 40th ANNIVERSARY EDITION ABS

Kawasaki
Let the Good Times Roll®

PARTS DIAGRAM

Radiator

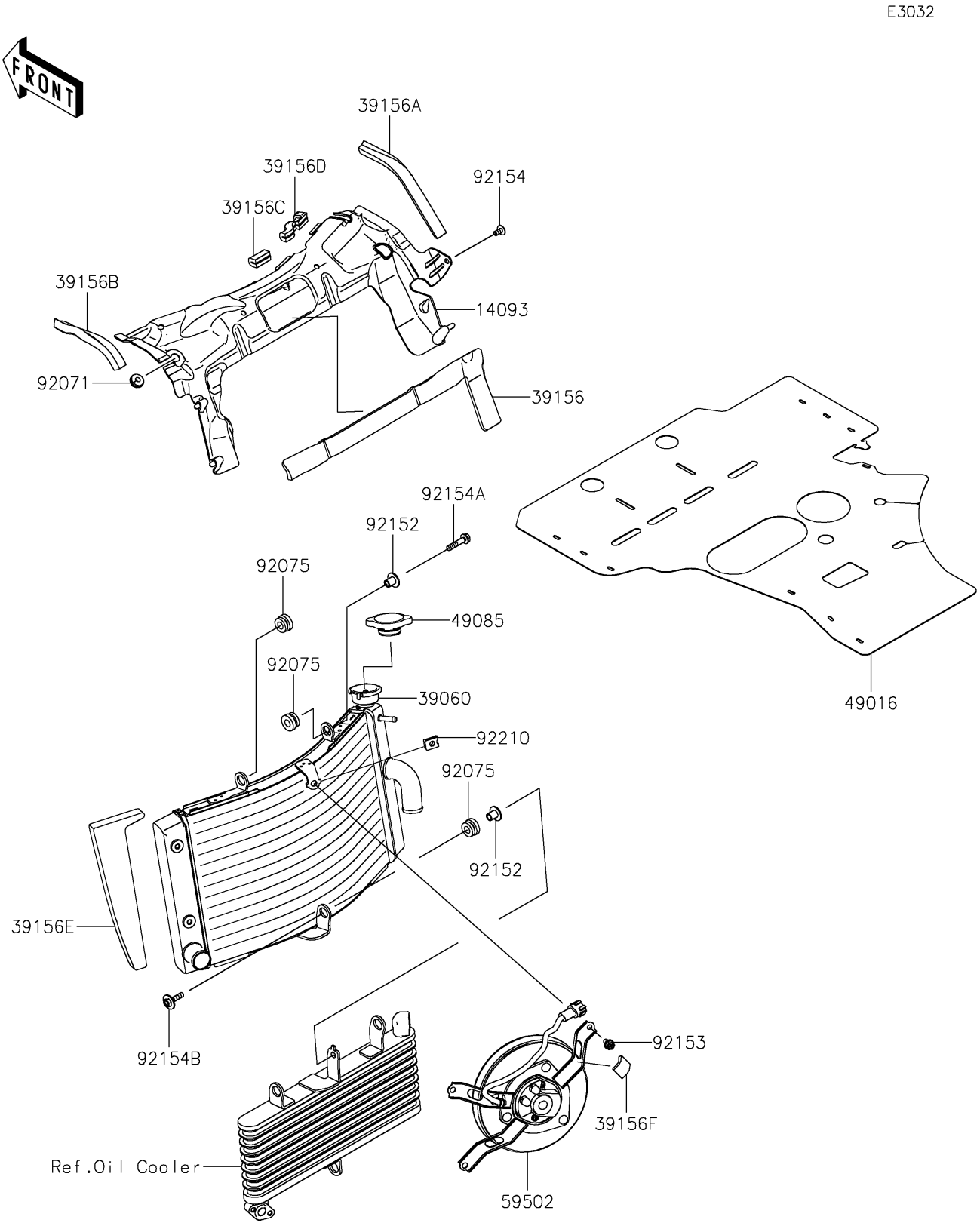

© 2026 Kawasaki Motors Corp., U.S.A.

2024 NINJA® ZX™-10R 40th ANNIVERSARY EDITION ABS

Kawasaki
Let the Good Times Roll®

PARTS LIST
Radiator

ITEM NAME	PART NUMBER	QUANTITY
COVER (Ref # 14093)	14093-1200	1
RADIATOR (Ref # 39060)	39060-0759	1
PAD (Ref # 39156)	39156-0730	1
PAD,15X163X10 (Ref # 39156A)	39156-2615	1
PAD,15X104X10 (Ref # 39156B)	39156-2643	1
PAD,20X26.5X5 (Ref # 39156C)	39156-2644	1
PAD,13.5X64X5 (Ref # 39156D)	39156-2645	1
PAD,RADIATOR LH (Ref # 39156E)	39156-2646	1
PAD,23X19X4 (Ref # 39156F)	39156-2737	1
COVER-SEAL,ENGINE RR (Ref # 49016)	49016-0669	1
CAP-ASSY-PRESSURE (Ref # 49085)	49085-0006	1
FAN-ASSY (Ref # 59502)	59502-0631	1
GROMMET (Ref # 92071)	92071-0811	1
DAMPER,RUBBER (Ref # 92075)	92075-1123	3
COLLAR (Ref # 92152)	92152-1074	2
BOLT (Ref # 92153)	92153-0531	3
BOLT,6X12 (Ref # 92154)	92154-1892	1
BOLT,FLANGED,15X30 (Ref # 92154A)	92154-2119	1
BOLT,6X25 (Ref # 92154B)	92154-4259	1
NUT (Ref # 92210)	92210-1323	1

© 2026 Kawasaki Motors Corp., U.S.A.