2005 Ninja® ZX™-10R

PARTS DIAGRAM

Fenders

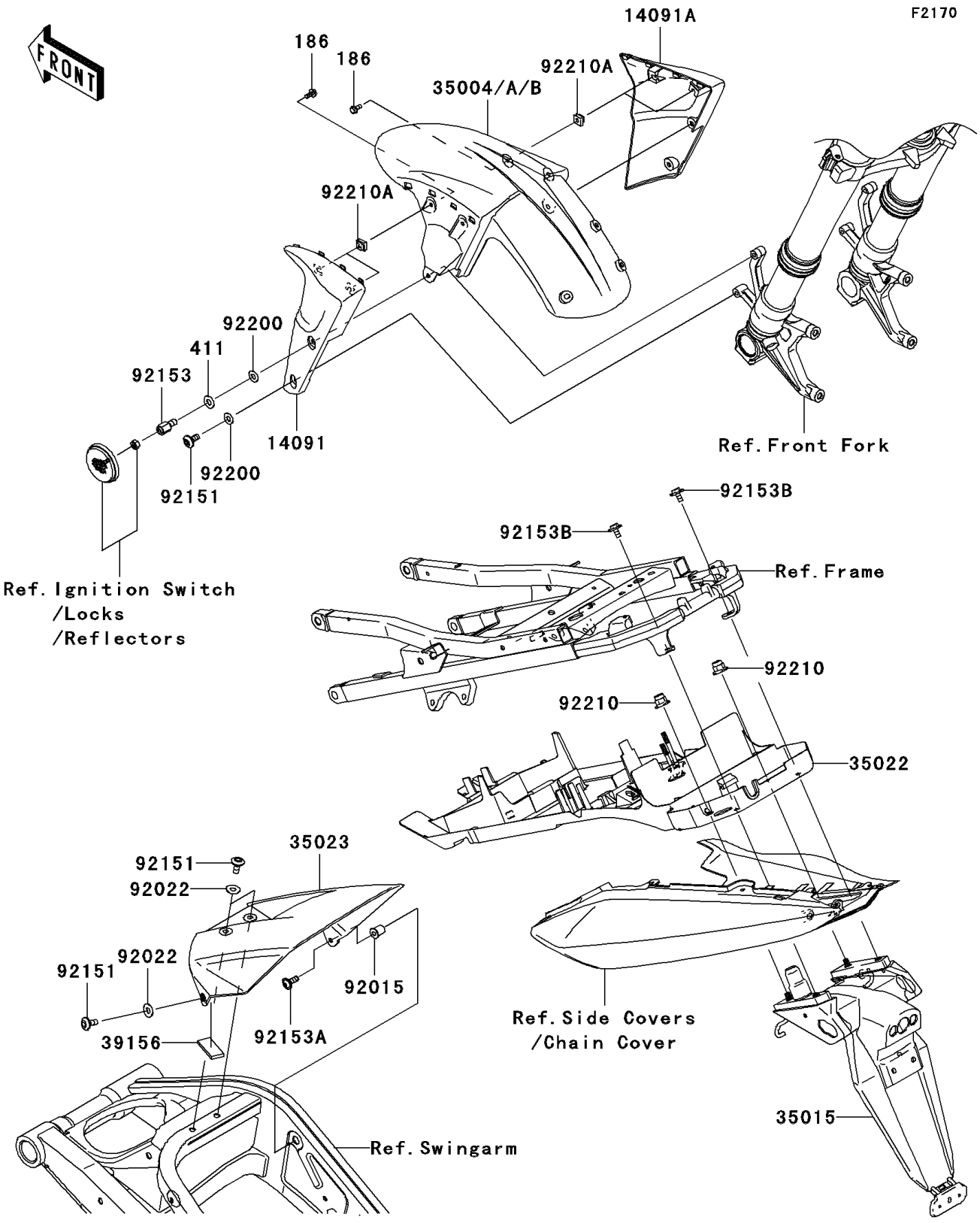

© 2026 Kawasaki Motors Corp., U.S.A.

2005 Ninja® ZX™-10R

PARTS LIST

Fenders

ITEM NAME	PART NUMBER	QUANTITY
BOLT-UPSET-WP (Ref # 186)	186L0514	4
WASHER-PLAIN,6MM,BLACK (Ref # 411)	411F0600	2
COVER,FRONT FENDER,LH,F.BLACK (Ref # 14091)	14091-0103-6Z	1
COVER,FRONT FENDER,RH,F.BLACK (Ref # 14091A)	14091-0104-6Z	1
FENDER-FRONT,P.M.RED (Ref # 35004)	35004-0034-724	1
FENDER-FRONT,M.F.R.TITANIUM (Ref # 35004A)	35004-0034-725	1
FENDER-FRONT,L.GREEN (Ref # 35004B)	35004-0034-777	1
FLAP-COMP (Ref # 35015)	35015-0004	1
FENDER-COMP-REAR (Ref # 35022)	35022-0019	1
FENDER-REAR,INNER,BLACK (Ref # 35023)	35023-0051-6D	1
PAD,RR FENDER (Ref # 39156)	39156-0061	1
NUT (Ref # 92015)	92015-1700	1
WASHER,6.5X16X1 (Ref # 92022)	92022-1143	3
BOLT,SOCKET,6X14 (Ref # 92151)	92151-1654	5
BOLT,6MM (Ref # 92153)	92153-0335	2
BOLT,6X18 (Ref # 92153A)	92153-0478	1
BOLT,6X20 (Ref # 92153B)	92153-0562	2
WASHER,6.5X14X1 (Ref # 92200)	92200-1388	4
NUT,CAP,6MM (Ref # 92210)	92210-0170	2
NUT,5MM (Ref # 92210A)	92210-1266	4

© 2026 Kawasaki Motors Corp., U.S.A.