2004 Ninja® ZX™-10R

PARTS DIAGRAM

Taillight(s)

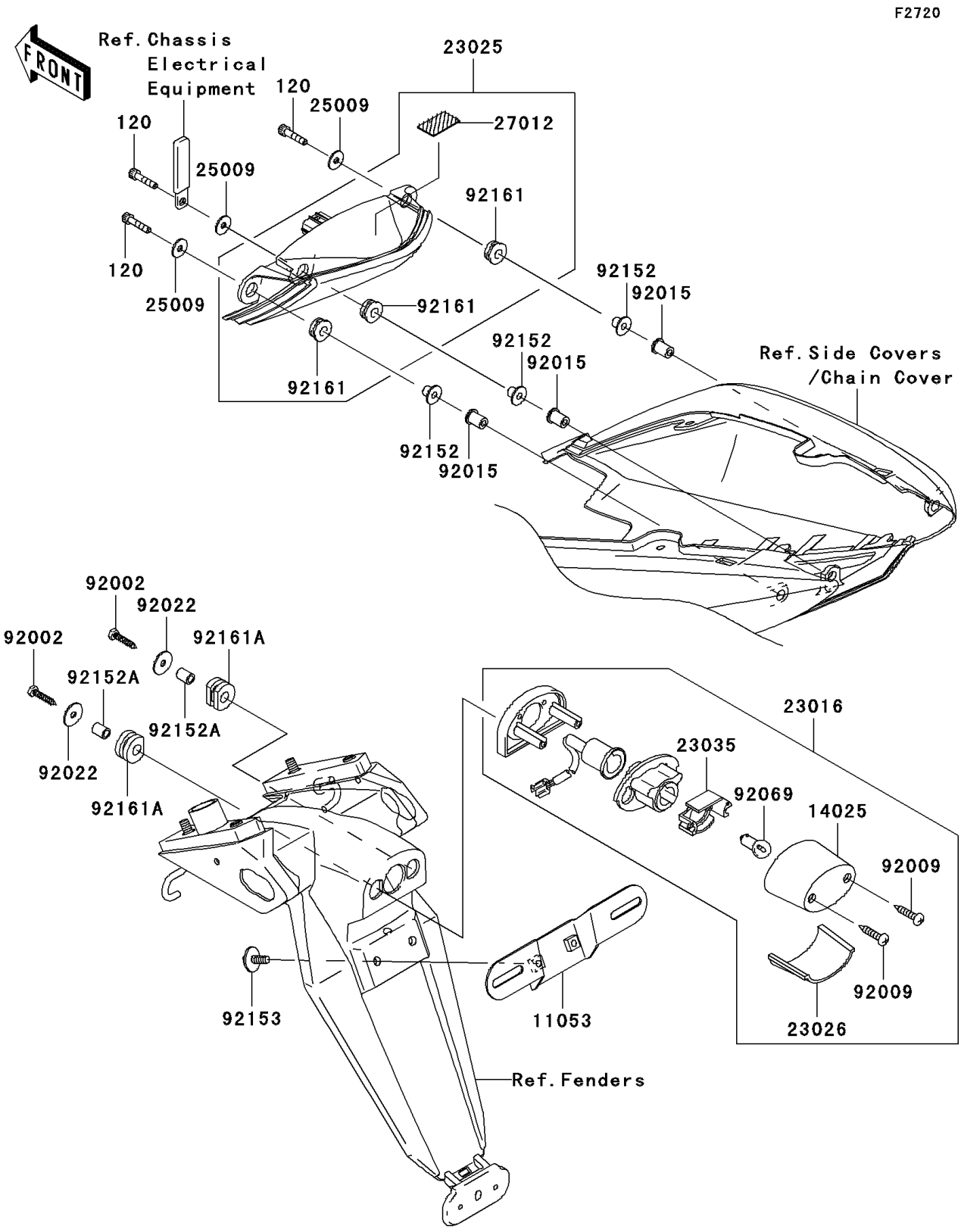

© 2026 Kawasaki Motors Corp., U.S.A.

2004 Ninja® ZX™-10R

PARTS LIST

Taillight(s)

ITEM NAME	PART NUMBER	QUANTITY
BOLT-SOCKET (Ref # 120)	120W0522	3
BRACKET,LICENSE (Ref # 11053)	11053-0400	1
COVER,LICENSE LAMP (Ref # 14025)	14025-1725	1
LAMP-ASSY,LICENSE (Ref # 23016)	23016-0003	1
LAMP-TAIL (Ref # 23025)	23025-0004	1
LENS,LICENSE LAMP (Ref # 23026)	23026-1064	1
REFLECTOR-LAMP,LICENSE (Ref # 23035)	23035-1066	1
WASHER,5.2X16X1.2 (Ref # 25009)	25009-004	3
MAGIC TAPE (Ref # 27012)	27012-0049	1
BOLT,TAPPING,5X25 (Ref # 92002)	92002-1831	2
SCREW,TAPPING,4X20 (Ref # 92009)	92009-1378	2
NUT,WELL,5MM (Ref # 92015)	92015-1757	3
WASHER,5.5X20X1.2 (Ref # 92022)	92022-1581	2
BULB,12V 5W (Ref # 92069)	92069-1055	1
COLLAR (Ref # 92152)	92152-0092	3
COLLAR,6X9X11.5 (Ref # 92152A)	92152-1458	2
BOLT,6X16 (Ref # 92153)	92153-0684	2
DAMPER (Ref # 92161)	92161-1188	3
DAMPER (Ref # 92161A)	92161-1313	2

© 2026 Kawasaki Motors Corp., U.S.A.