2022 MULE™ 4010 4x4

PARTS DIAGRAM

Fuel Tank

F2410

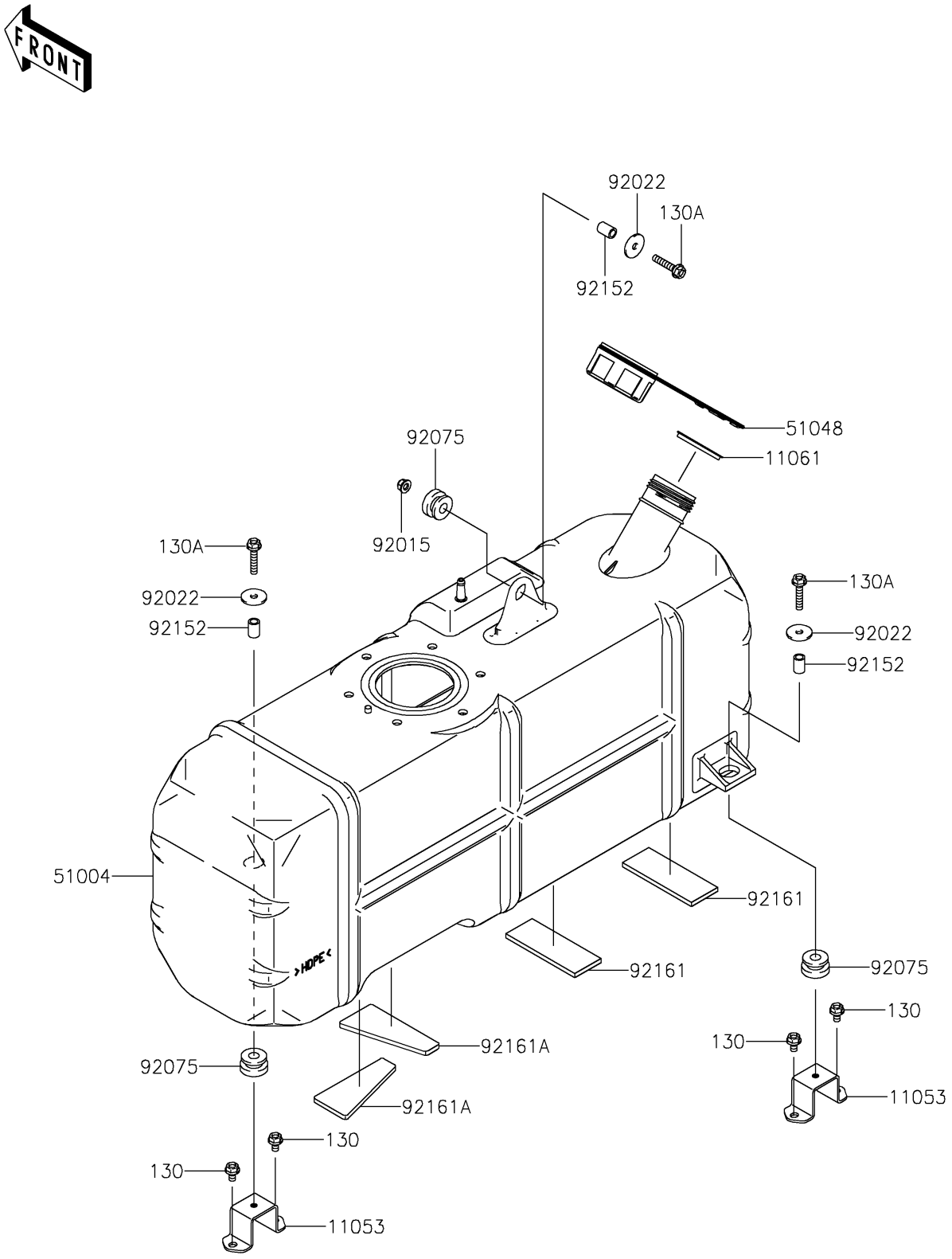

© 2026 Kawasaki Motors Corp., U.S.A.

2022 MULE™ 4010 4x4

PARTS LIST

Fuel Tank

ITEM NAME	PART NUMBER	QUANTITY
BRACKET (Ref # 11053)	11053-7512	2
GASKET,FUEL TANK CAP (Ref # 11061)	11061-0395	1
TANK-FUEL (Ref # 51004)	51004-0029	1
CAP-ASSY-TANK,FUEL (Ref # 51048)	51048-0026	1
NUT,LOCK,FLANGED,6MM (Ref # 92015)	92015-1675	1
WASHER,6.5X24X2 (Ref # 92022)	92022-1690	3
DAMPER (Ref # 92075)	92075-1787	3
COLLAR,7.02X10.32X15.3 (Ref # 92152)	92152-7511	3
DAMPER,92X35X4.76 (Ref # 92161)	92161-0813	2
DAMPER,92X19X4.76 (Ref # 92161A)	92161-0814	2
BOLT-FLANGED,6X10 (Ref # 130)	130BA0610	4
BOLT-FLANGED,6X30 (Ref # 130A)	130BA0630	3

© 2026 Kawasaki Motors Corp., U.S.A.