2021 MULE™ 4010 4x4

PARTS DIAGRAM

Frame

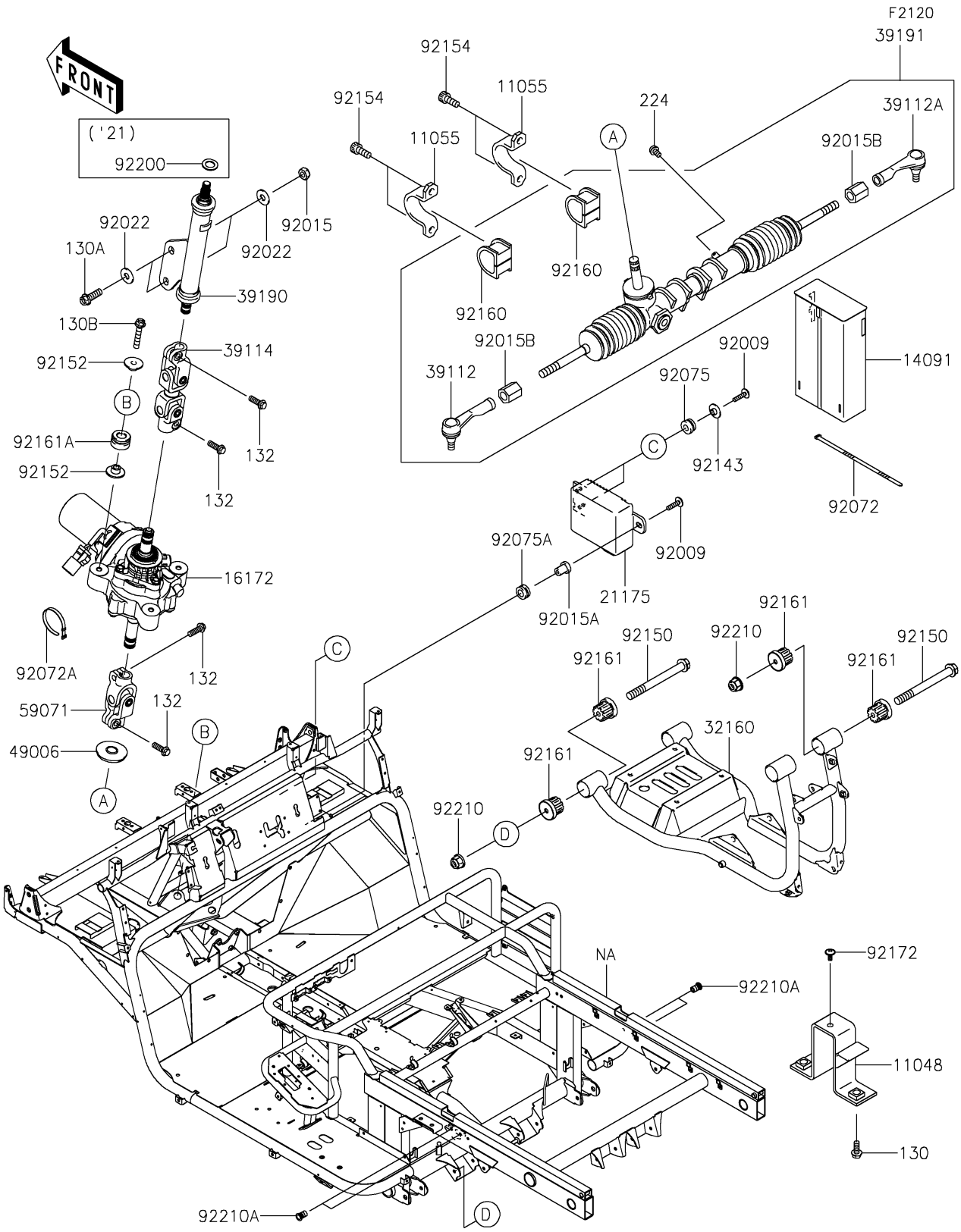

© 2026 Kawasaki Motors Corp., U.S.A.

2021 MULE™ 4010 4x4

PARTS LIST

Frame

ITEM NAME	PART NUMBER	QUANTITY
BRACKET,REAR FRAME (Ref # 11048)	11048-1245	1
BRACKET,STEERING GEAR (Ref # 11055)	11055-1240	2
COVER,ECU (Ref # 14091)	14091-7560	1
ACTUATOR (Ref # 16172)	16172-0028	1
CONTROL UNIT-ELECTRONIC,E.P.S (Ref # 21175)	21175-7501	1
FRAME-COMP,RR (Ref # 32160)	32160-0004	1
RODEND-TIE,STEERING GEAR,LH (Ref # 39112)	39112-1068	1
RODEND-TIE,STEERING GEAR,RH (Ref # 39112A)	39112-1069	1
SHAFT-COMP-STRG (Ref # 39114)	39114-0019	1
SHAFT-ASSY-STEERING (Ref # 39190)	39190-7501	1
GEAR-ASSY-STEERING (Ref # 39191)	39191-0021	1
BOOT,STEERING SHAFT,LWR (Ref # 49006)	49006-1255	1
JOINT (Ref # 59071)	59071-7501	1
SCREW,6X28,BLACK (Ref # 92009)	92009-1400	3
NUT,LOCK,10MM,BLACK (Ref # 92015)	92015-1189	2
NUT,RUBBER,6MM (Ref # 92015A)	92015-1692	1
NUT (Ref # 92015B)	92015-1864	2
WASHER,10.5X26X2.3 (Ref # 92022)	92022-044	4
BAND,L=123 (Ref # 92072)	92072-030	1
BAND,L=186 (Ref # 92072A)	92072-056	1
DAMPER,RUBBER (Ref # 92075)	92075-1123	2
DAMPER (Ref # 92075A)	92075-294	1
COLLAR,L=6.5 (Ref # 92143)	92143-1025	2
BOLT,FLANGED,10X100 (Ref # 92150)	92150-1731	4
COLLAR,8.5X30X10.6 (Ref # 92152)	92152-2149	6
BOLT,SOCKET,10X23 (Ref # 92154)	92154-1434	4
DAMPER,STEERING GEAR (Ref # 92160)	92160-1084	2
DAMPER (Ref # 92161)	92161-0800	8
DAMPER,ACTUATOR (Ref # 92161A)	92161-7517	3

© 2026 Kawasaki Motors Corp., U.S.A.

2021 MULE™ 4010 4x4

PARTS LIST

Frame

ITEM NAME	PART NUMBER	QUANTITY
SCREW,6X14 (Ref # 92172)	92172-0004	1
WASHER,15X25X1.6 (Ref # 92200)	92200-0460	1
NUT,LOCK,FLANGED,10MM (Ref # 92210)	92210-0276	4
NUT,POP,6MM,L=15 (Ref # 92210A)	92210-1397	4
BOLT-FLANGED,8X20 (Ref # 130)	130BA0820	2
BOLT-FLANGED,10X30 (Ref # 130A)	130BA1030	2
BOLT-FLANGED,8X45 (Ref # 130B)	130CA0845	3
BOLT-FLANGED-SMALL,8X25 (Ref # 132)	132BA0825	4
SCREW-PAN-WP-CROS,5X8 (Ref # 224)	224AA0508	1

© 2026 Kawasaki Motors Corp., U.S.A.