2021 MULE™ 4010 4x4

PARTS DIAGRAM

Fuel Evaporative System

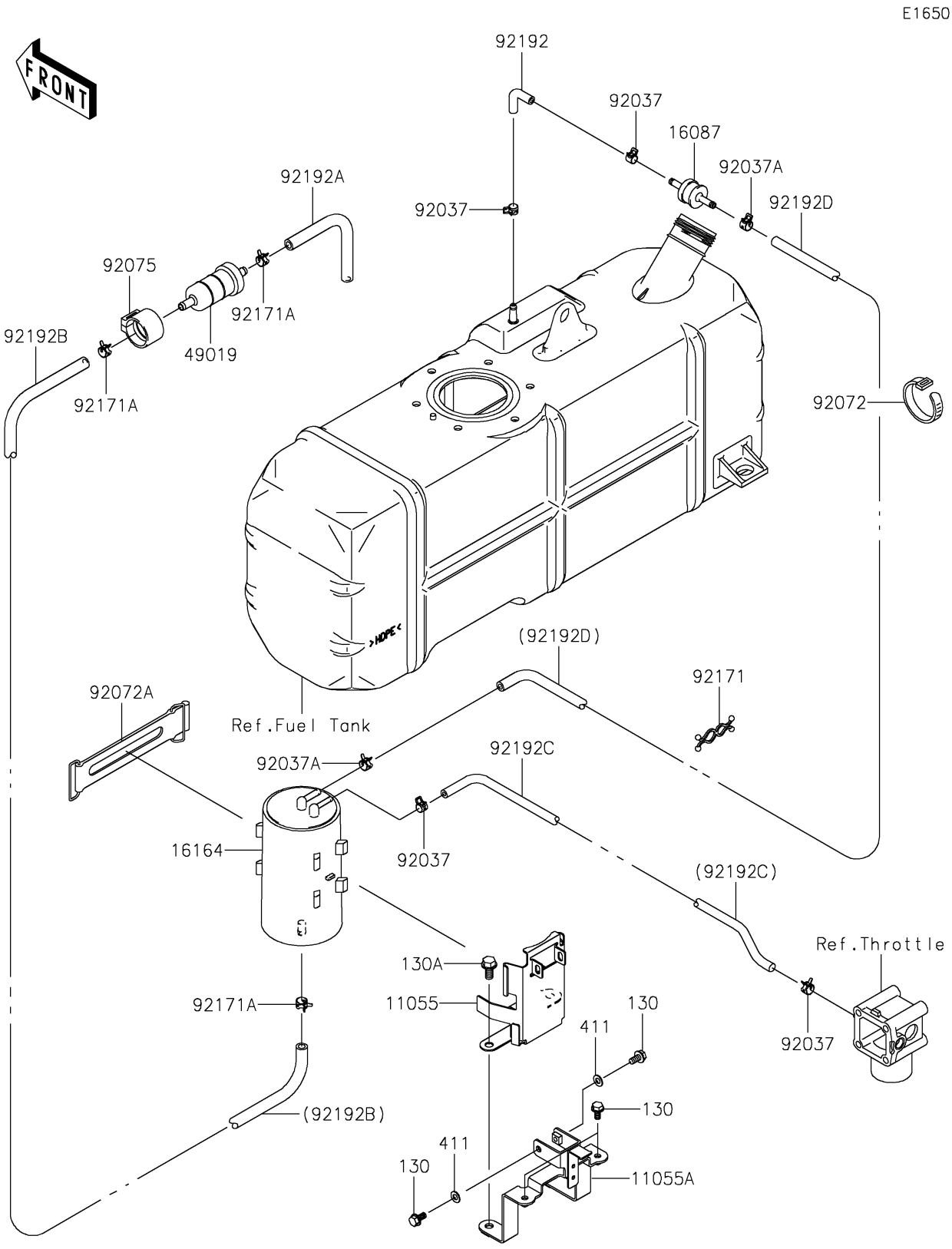

© 2026 Kawasaki Motors Corp., U.S.A.

2021 MULE™ 4010 4x4

PARTS LIST

Fuel Evaporative System

ITEM NAME	PART NUMBER	QUANTITY
BRACKET,UPP (Ref # 11055)	11055-0263	1
BRACKET,LWR (Ref # 11055A)	11055-0407	1
VALVE-CHECK (Ref # 16087)	16087-0008	1
CANISTER (Ref # 16164)	16164-0018	1
FILTER-FUEL (Ref # 49019)	49019-0032	1
CLAMP,TUBE (Ref # 92037)	92037-1461	4
CLAMP,TUBE (Ref # 92037A)	92037-1505	2
BAND,L=186 (Ref # 92072)	92072-056	1
BAND,L=168 (Ref # 92072A)	92072-1306	1
DAMPER,FUEL FILTER (Ref # 92075)	92075-1853	1
CLAMP (Ref # 92171)	92171-0476	1
CLAMP (Ref # 92171A)	92171-0515	3
TUBE,FUEL TANK-CHECK VALVE (Ref # 92192)	92192-0067	1
TUBE,FILTER-AIR (Ref # 92192A)	92192-0609	1
TUBE,CANISTER-FUEL FILTER (Ref # 92192B)	92192-0713	1
TUBE,4.5X9.5X460 (Ref # 92192C)	92192-0909	1
TUBE (Ref # 92192D)	92192-1161	1
BOLT-FLANGED,6X12 (Ref # 130)	130BA0612	4
BOLT-FLANGED,8X16 (Ref # 130A)	130BA0816	2
WASHER-PLAIN,6MM (Ref # 411)	411AA0600	2

© 2026 Kawasaki Motors Corp., U.S.A.