2021 MULE™ 4010 4x4

PARTS DIAGRAM

Converter Cover

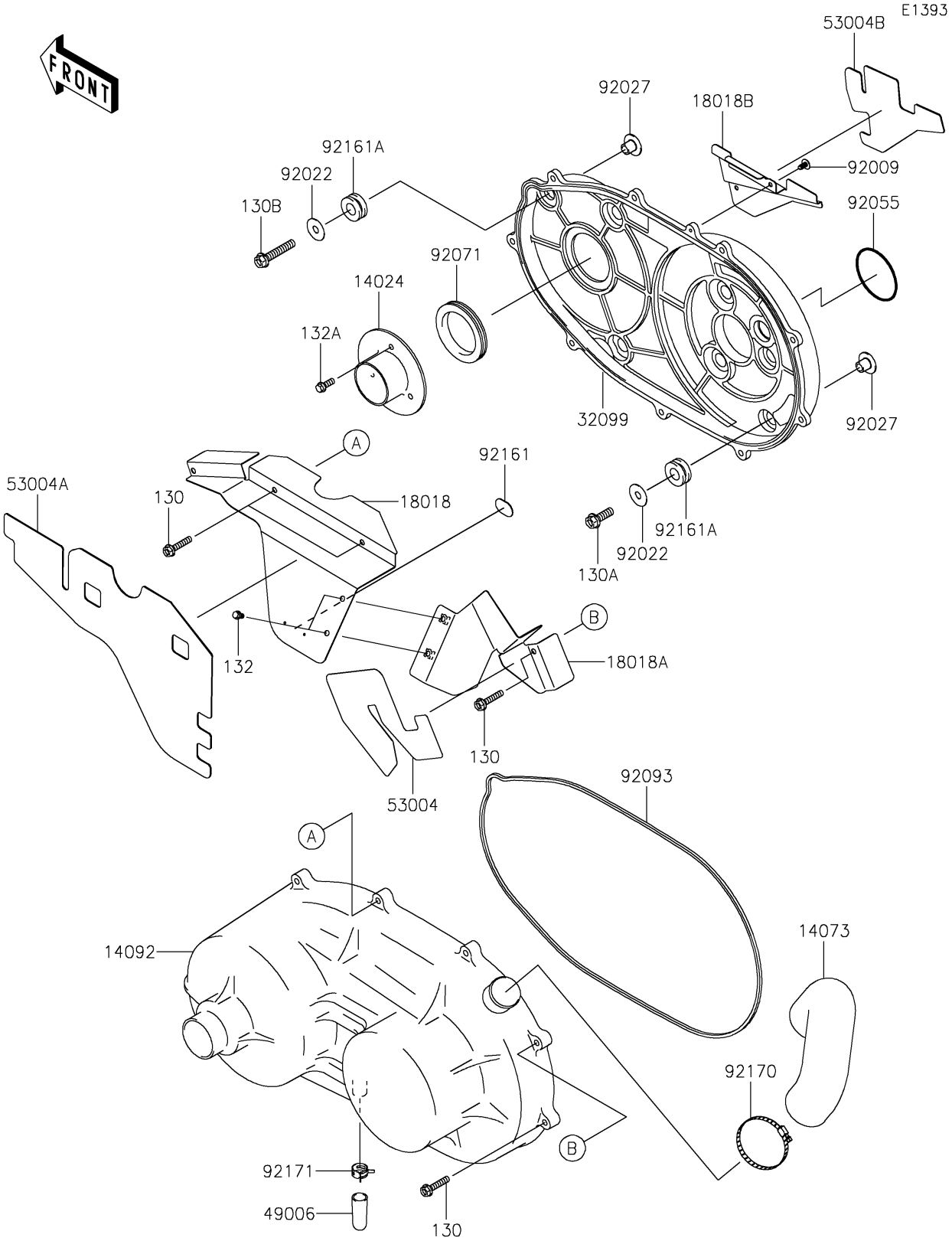

© 2026 Kawasaki Motors Corp., U.S.A.

2021 MULE™ 4010 4x4

PARTS LIST

Converter Cover

ITEM NAME	PART NUMBER	QUANTITY
COVER,FAN (Ref # 14024)	14024-1554	1
DUCT,EXHAUST (Ref # 14073)	14073-0234	1
COVER,BELT CONVERTER (Ref # 14092)	14092-1035	1
PLATE-HEAT GUARD (Ref # 18018)	18018-0019	1
PLATE-HEAT GUARD (Ref # 18018A)	18018-0020	1
PLATE-HEAT GUARD (Ref # 18018B)	18018-0021	1
CASE,BELT CONVERTER (Ref # 32099)	32099-0730	1
BOOT (Ref # 49006)	49006-1351	1
MAT (Ref # 53004)	53004-0645	1
MAT (Ref # 53004A)	53004-0646	1
MAT (Ref # 53004B)	53004-0647	1
SCREW,TAPPING,5X10 (Ref # 92009)	92009-1332	2
WASHER,8.5X26X0.8 (Ref # 92022)	92022-101	7
COLLAR (Ref # 92027)	92027-4015	7
RING-O,CRANKCASE SIDE (Ref # 92055)	92055-1395	1
GROMMET,CONVERTER CASE (Ref # 92071)	92071-1212	1
SEAL,BELT CONVERTER COVER (Ref # 92093)	92093-0582	1
DAMPER (Ref # 92161)	92161-0406	1
DAMPER (Ref # 92161A)	92161-1484	7
CLAMP (Ref # 92170)	92170-1764	1
CLAMP (Ref # 92171)	92171-1277	1
BOLT-FLANGED,6X30 (Ref # 130)	130BA0630	9
BOLT-FLANGED,8X25 (Ref # 130A)	130BA0825	6
BOLT-FLANGED,8X45 (Ref # 130B)	130BA0845	1
BOLT-FLANGED-SMALL,6X10 (Ref # 132)	132BA0610	2
BOLT-FLANGED-SMALL,6X16 (Ref # 132A)	132BA0616	3

© 2026 Kawasaki Motors Corp., U.S.A.