1991 Zephyr 750

PARTS DIAGRAM

Decal(ZR750-C1/C2)

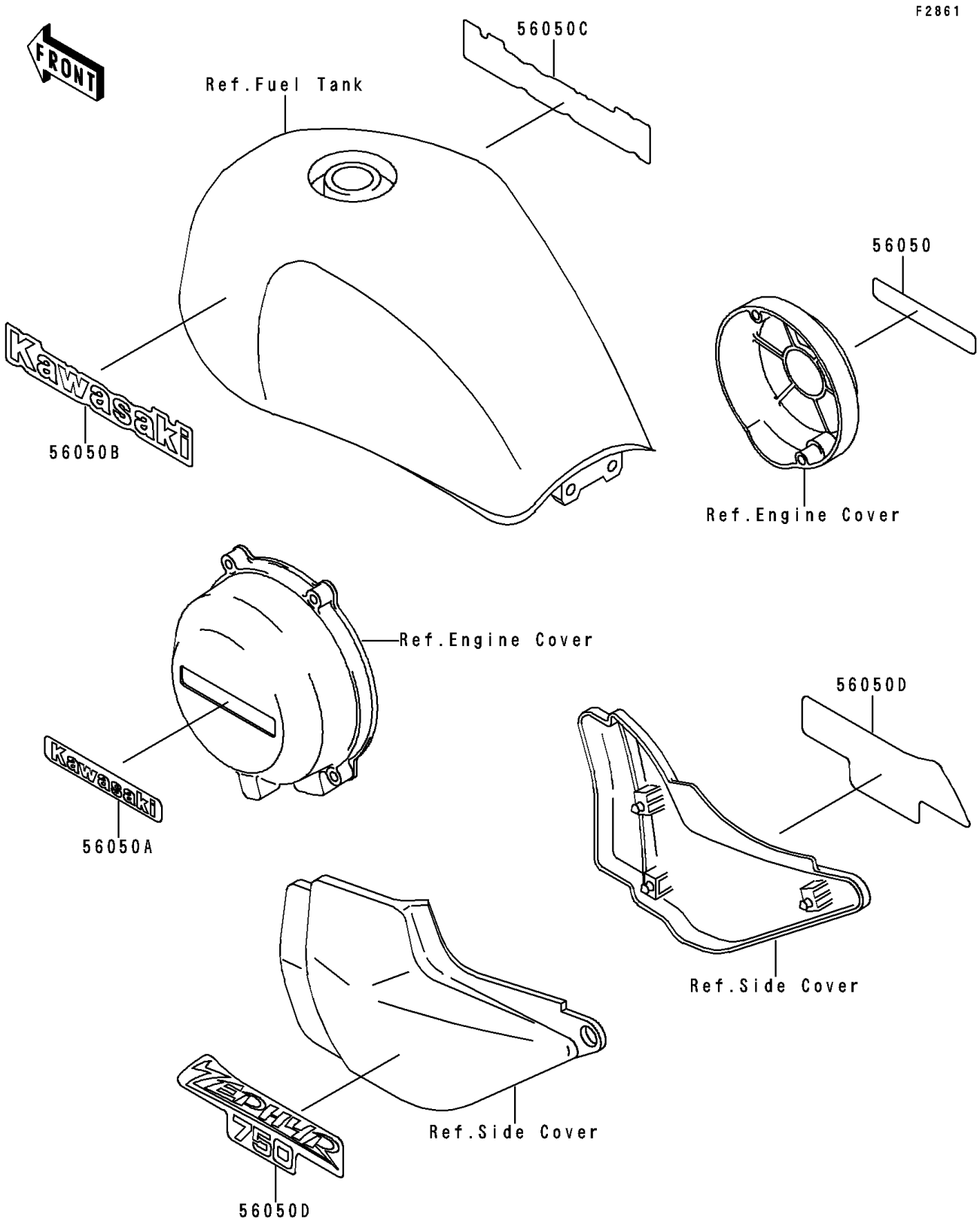

© 2026 Kawasaki Motors Corp., U.S.A.

1991 Zephyr 750

PARTS LIST

Decal(ZR750-C1/C2)

ITEM NAME	PART NUMBER	QUANTITY
MARK,PULSING CAP,KAWASAKI (Ref # 56050)	56050-1578	1
MARK,GENERATOR COVER,KAWASAKI (Ref # 56050A)	56050-1579	1
MARK,FUEL TANK,LH,KAWASAKI (Ref # 56050B)	56050-1600	1
MARK,FUEL TANK,RH,KAWASAKI (Ref # 56050C)	56050-1601	1
MARK,SIDE COVER,FOR RED (Ref # 56050D)	56050-1602	2

© 2026 Kawasaki Motors Corp., U.S.A.