1991 Zephyr 750

PARTS DIAGRAM

Side Cover/Chain Case

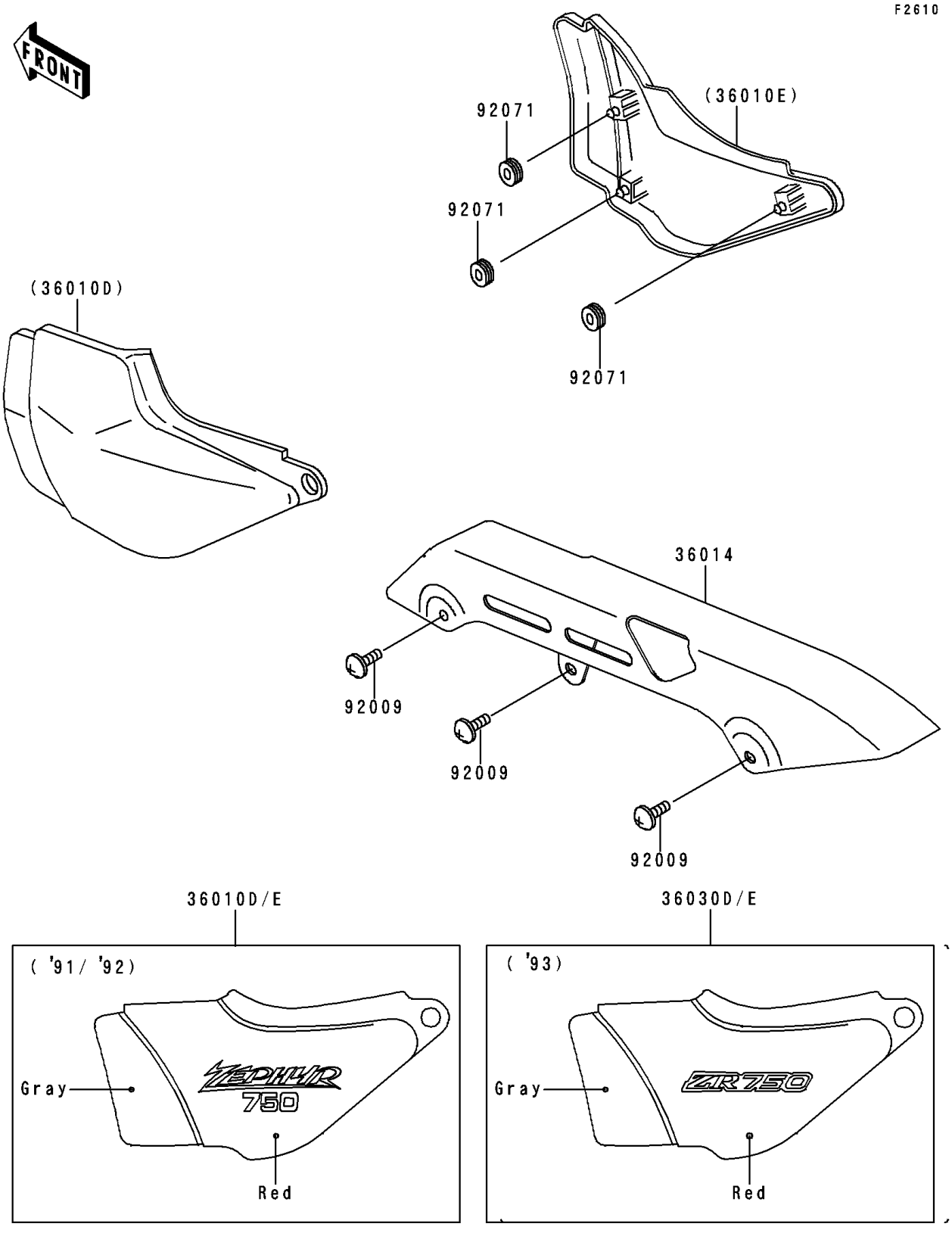

© 2026 Kawasaki Motors Corp., U.S.A.

1991 Zephyr 750

PARTS LIST

Side Cover/Chain Case

ITEM NAME	PART NUMBER	QUANTITY
COVER-SIDE,LH,RED/GRAY (Ref # 36010D)	36010-5440-JV	1
COVER-SIDE,RH,RED/GRAY (Ref # 36010E)	36010-5441-JV	1
CASE-CHAIN (Ref # 36014)	36014-1172	1
SCREW,6X10,WHITE (Ref # 92009)	92009-1286	3
GROMMET (Ref # 92071)	92071-056	6

© 2026 Kawasaki Motors Corp., U.S.A.