1991 Zephyr 750

PARTS DIAGRAM

Seat

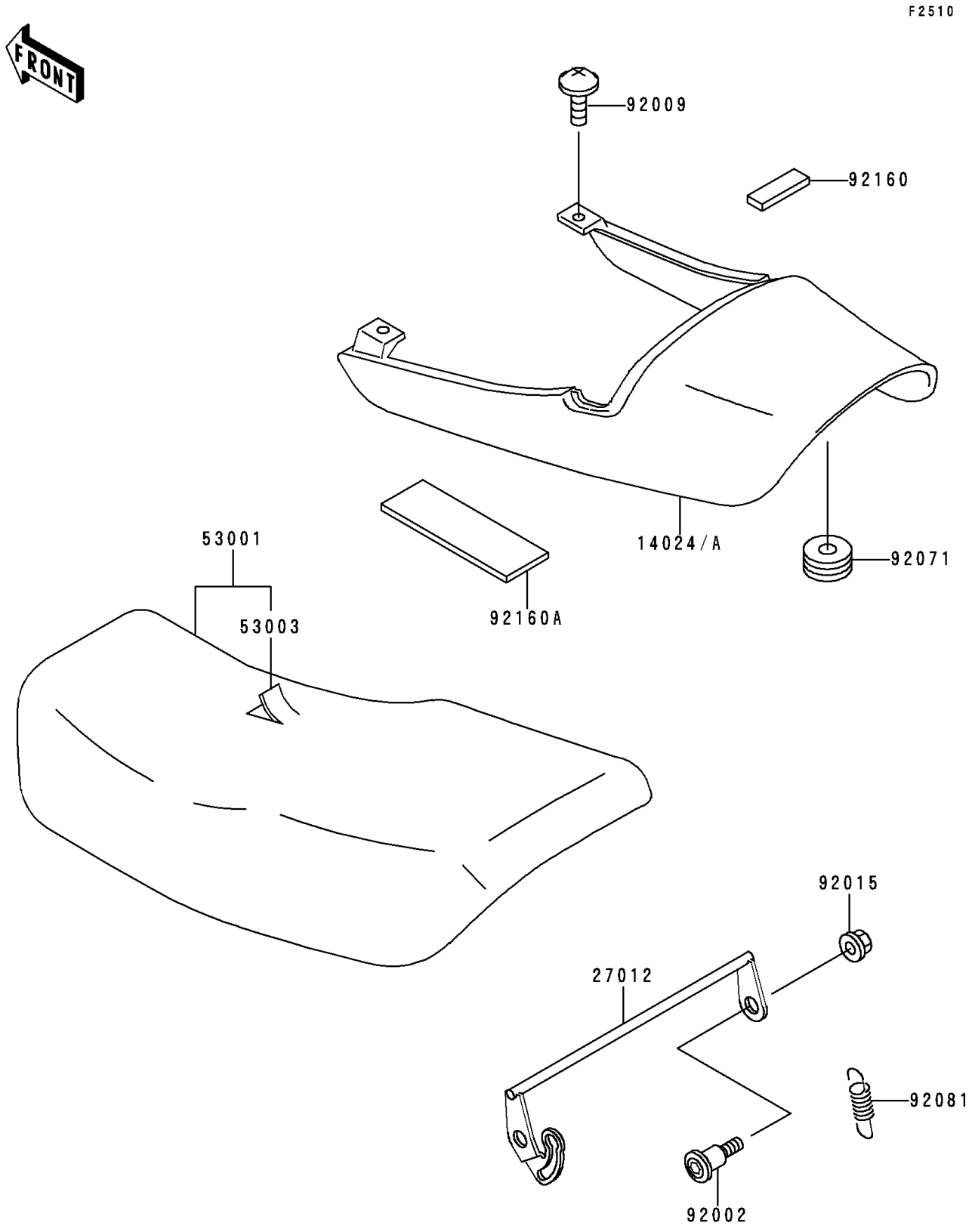

© 2026 Kawasaki Motors Corp., U.S.A.

1991 Zephyr 750

PARTS LIST

Seat

ITEM NAME	PART NUMBER	QUANTITY
COVER,SEAT,C.P.RED (Ref # 14024)	14024-1973-A5	1
HOOK,SEAT (Ref # 27012)	27012-1422	1
SEAT-ASSY,DUAL,W/BAND,BLACK (Ref # 53001)	53001-1622-MA	1
LEATHER,SEAT,BLACK (Ref # 53003)	53003-1243-MA	1
BOLT,SOCKET,6MM (Ref # 92002)	92002-1616	2
SCREW,6X14 (Ref # 92009)	92009-1288	2
NUT,FLANGED,6MM (Ref # 92015)	92015-1699	2
GROMMET (Ref # 92071)	92071-056	2
SPRING (Ref # 92081)	92081-1023	1
DAMPER (Ref # 92160)	92160-1099	3
DAMPER (Ref # 92160A)	92160-1266	2

© 2026 Kawasaki Motors Corp., U.S.A.