1991 Zephyr 750

PARTS DIAGRAM

Rear Hub

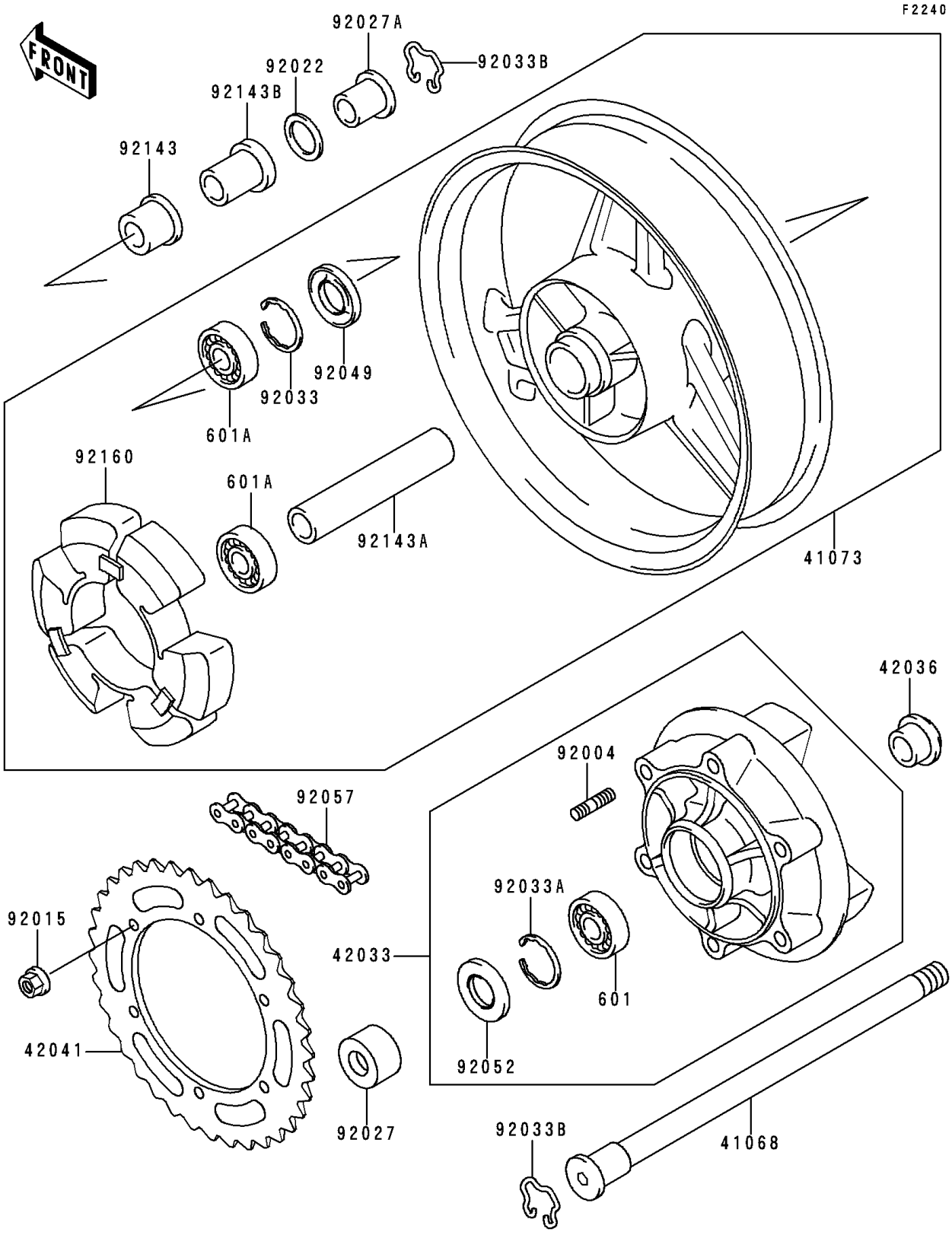

© 2026 Kawasaki Motors Corp., U.S.A.

1991 Zephyr 750

PARTS LIST

Rear Hub

ITEM NAME	PART NUMBER	QUANTITY
BEARING-BALL,#6205G (Ref # 601)	601B6205G	1
BEARING-BALL,#6303ZZC3 (Ref # 601A)	601B6303ZZ	2
AXLE,RR (Ref # 41068)	41068-1323	1
WHEEL-ASSY,RR,G.GRAY (Ref # 41073)	41073-1481-JF	1
COUPLING-ASSY,RR HUB,G.GRAY (Ref # 42033)	42033-1142-GD	1
SLEEVE,RR AXLE,L=22 (Ref # 42036)	42036-1233	1
SPROCKET-HUB,39T (Ref # 42041)	42041-1371	1
STUD,10X19.5 (Ref # 92004)	92004-1151	6
NUT,10MM (Ref # 92015)	92015-1720	6
WASHER,23X32X2.3 (Ref # 92022)	92022-1618	1
COLLAR,L=21 (Ref # 92027)	92027-1661	1
COLLAR,RR AXLE,L=28 (Ref # 92027A)	92027-1810	1
RING-SNAP,47MM (Ref # 92033)	92033-1042	1
RING-SNAP,52MM (Ref # 92033A)	92033-1043	1
RING-SNAP,RR AXLE (Ref # 92033B)	92033-1156	2
SEAL-OIL,BJN28475 (Ref # 92049)	92049-1056	1
SEAL-OIL,TWC35527 (Ref # 92052)	92052-006	1
CHAIN,DRIVE,EK525MV-OX106L (Ref # 92057)	92057-1320	1
COLLAR,RR AXLE,L=26 (Ref # 92143)	92143-1210	1
COLLAR,RR HUB,L=125 (Ref # 92143A)	92143-1393	1
COLLAR,RR AXLE,L=38 (Ref # 92143B)	92143-1440	1
DAMPER,SHOCK,RR HUB (Ref # 92160)	92160-1248	1

© 2026 Kawasaki Motors Corp., U.S.A.