1991 Zephyr 750

PARTS DIAGRAM

Frame

F2120

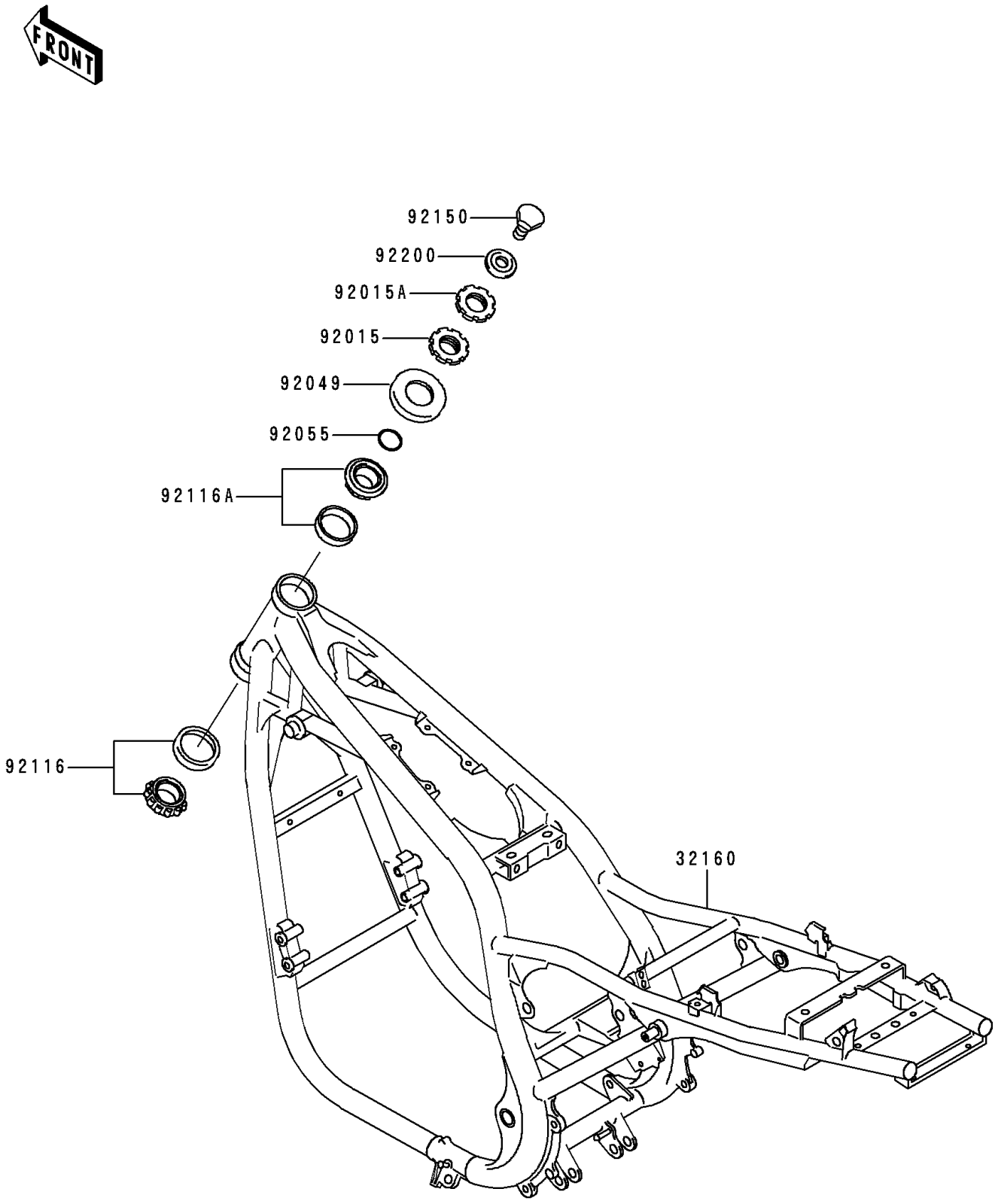

© 2026 Kawasaki Motors Corp., U.S.A.

1991 Zephyr 750

PARTS LIST

Frame

ITEM NAME	PART NUMBER	QUANTITY
FRAME-COMP,C.GRAY (Ref # 32160)	32160-1157-EZ	1
NUT,25MM (Ref # 92015)	92015-1803	1
NUT,25MM (Ref # 92015A)	92015-1810	1
SEAL-OIL,STEERING STEM (Ref # 92049)	92049-1214	1
RING-O,ID=24.5 (Ref # 92055)	92055-1459	1
BEARING-ROLLER,HR320/28XJ (Ref # 92116)	92116-1009	1
BEARING-ROLLER,HI-CAP32005JR-1 (Ref # 92116A)	92116-1056	1
BOLT,14X25 (Ref # 92150)	92150-1672	1
WASHER (Ref # 92200)	92200-1140	1

© 2026 Kawasaki Motors Corp., U.S.A.