1991 Zephyr 750

PARTS DIAGRAM

Breather Body/Oil Pan

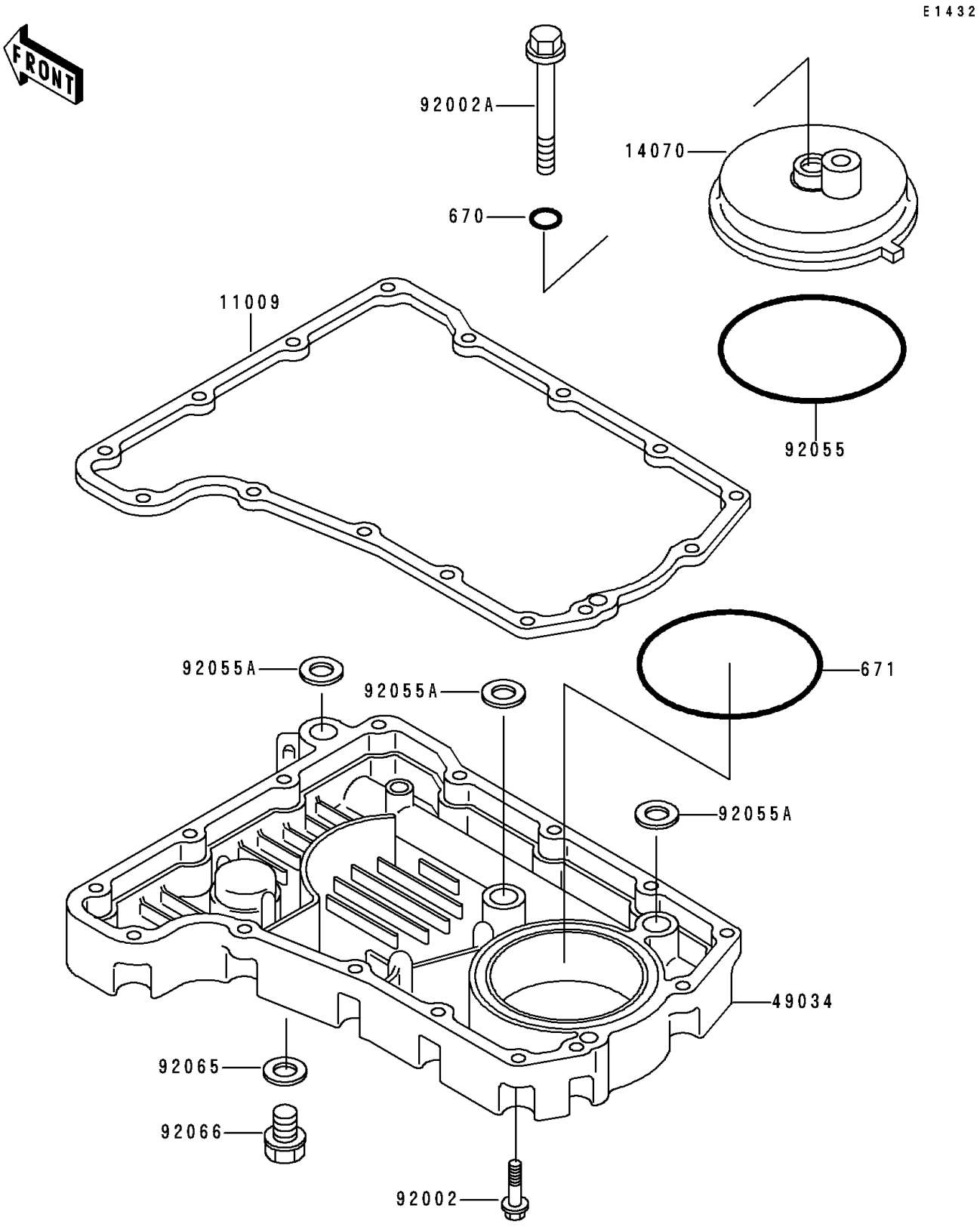

© 2026 Kawasaki Motors Corp., U.S.A.

1991 Zephyr 750

PARTS LIST

Breather Body/Oil Pan

ITEM NAME	PART NUMBER	QUANTITY
O RING,8MM (Ref # 670)	670B1508	1
O RING,90MM (Ref # 671)	671B2590	1
GASKET,OIL PAN (Ref # 11009)	11009-1983	1
BODY-BREATHER (Ref # 14070)	14070-1077	1
PAN-OIL (Ref # 49034)	49034-1091	1
BOLT,6X25 (Ref # 92002)	92002-1089	15
BOLT,8X72 (Ref # 92002A)	92002-1329	1
RING-O,91.6X3.4 (Ref # 92055)	92055-052	1
RING-O,19.5MM (Ref # 92055A)	92055-077	3
GASKET,12X22X2,DRAIN PLUG (Ref # 92065)	92065-097	1
PLUG,OIL DRAIN,12X15 (Ref # 92066)	92066-1174	1

© 2026 Kawasaki Motors Corp., U.S.A.