2024 MULE™ 4010 TRANS4x4® FE

PARTS DIAGRAM

Cables

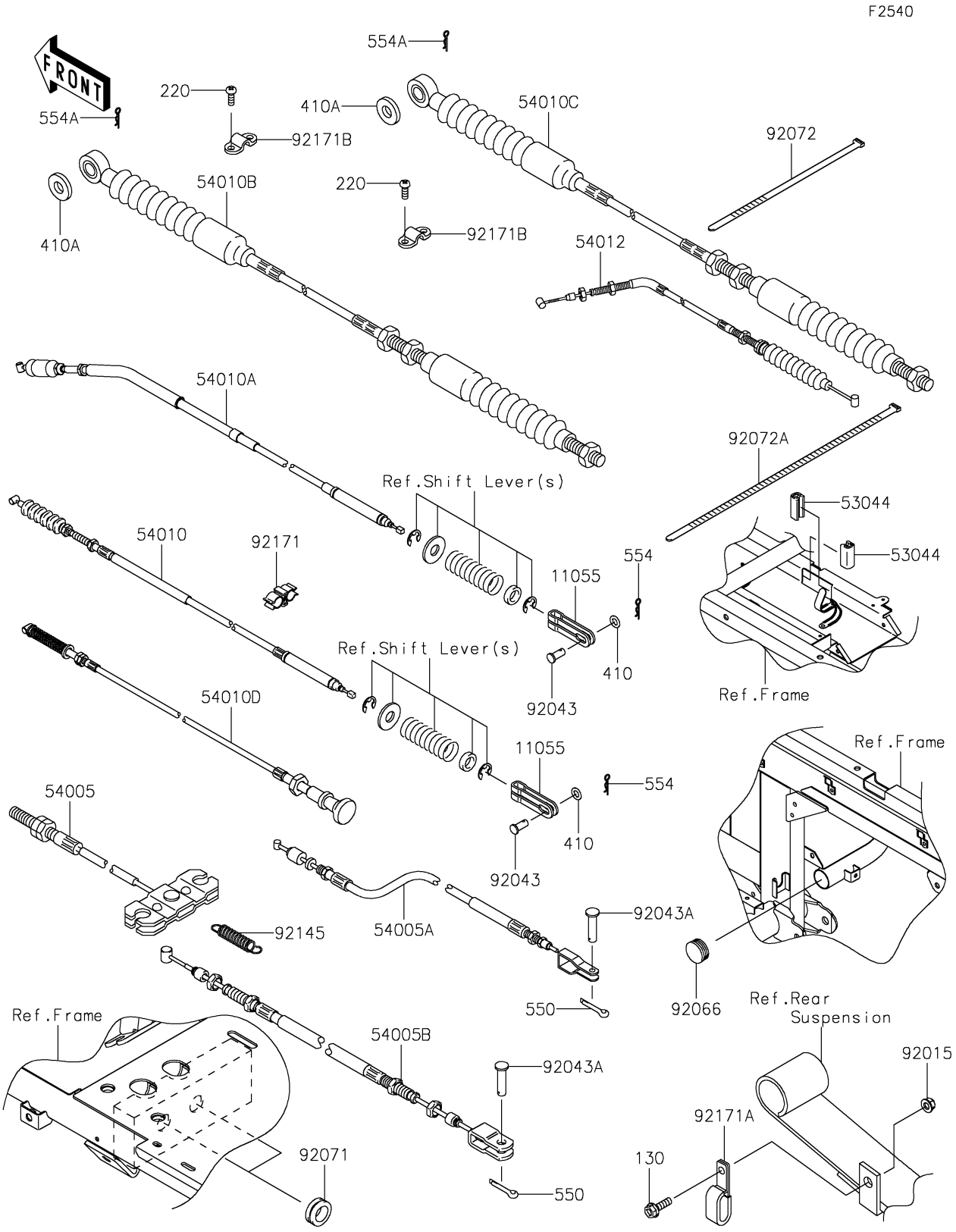

© 2026 Kawasaki Motors Corp., U.S.A.

2024 MULE™ 4010 TRANS4x4® FE

PARTS LIST

Cables

ITEM NAME	PART NUMBER	QUANTITY
BRACKET,DIFF LOCK (Ref # 11055)	11055-7505	2
TRIM,L=22 (Ref # 53044)	53044-7503	2
CABLE-BRAKE,PARKING,FR (Ref # 54005)	54005-1198	1
CABLE-BRAKE,PARKING,RR,RH (Ref # 54005A)	54005-7502	1
CABLE-BRAKE,PARKING,RR,LH (Ref # 54005B)	54005-7503	1
CABLE,2-4WD (Ref # 54010)	54010-0045	1
CABLE,DIFF LOCK (Ref # 54010A)	54010-0111	1
CABLE,SHIFT CONTROL (Ref # 54010B)	54010-0132	1
CABLE,HI/LOW (Ref # 54010C)	54010-0133	1
CABLE,HOOD (Ref # 54010D)	54010-0600	1
CABLE-THROTTLE (Ref # 54012)	54012-7505	1
NUT,LOCK,FLANGED,6MM (Ref # 92015)	92015-1675	1
PIN,6X11 (Ref # 92043)	92043-092	2
PIN (Ref # 92043A)	92043-1039	2
PLUG (Ref # 92066)	92066-7503	1
GROMMET (Ref # 92071)	92071-1027	2
BAND,L=188 (Ref # 92072)	92072-1239	3
BAND,L=368.3 (Ref # 92072A)	92072-3872	1
SPRING (Ref # 92145)	92145-7506	1
CLAMP (Ref # 92171)	92171-0129	1
CLAMP,CABLE (Ref # 92171A)	92171-0176	1
CLAMP (Ref # 92171B)	92171-1203	2
BOLT-FLANGED,6X20 (Ref # 130)	130AA0620	1
SCREW-PAN-CROS,5X14 (Ref # 220)	220AA0514	4
WASHER-PLAIN-SMALL (Ref # 410)	410AA0600	2
WASHER-PLAIN-SMALL,8MM (Ref # 410A)	410AA0800	2
PIN-COTTER,2.0X22 (Ref # 550)	550AA2022	2
PIN-SNAP,1.2X21.2 (Ref # 554)	554DA0600	2
PIN-SNAP (Ref # 554A)	554DA0800	2

© 2026 Kawasaki Motors Corp., U.S.A.